FORMAX®

FD 3200
Tabletop Air Feed Folder

OPERATOR MANUAL

8/2013

Introduction

Be sure to read this manual prior to using the product.
After reading, leave the manual at the site of use for easy reference whenever questions related to the product arise in the future.

Symbols

In this manual, several symbols are used to indicate important warnings. Please make sure to read instructions accompanied by these symbols. These symbols have the following meanings.

Note Describes instructions which must be followed in use.
Be sure to read the instructions to avoid problems due to incorrect operations.

Memo Indicates supplementary or useful information.

Ref. Describes names of related items and supplementary instructions.

Trademark

The product name and company name used in this manual are trademarks or registered trademarks of the respective companies.

For North America

Note:

This equipment has been tested and found to comply with the limits for a Class B digital device, pursuant to Part 15 of the FCC Rules. These limits are designed to provide reasonable protection against harmful interference in a residential installation. This equipment generates, uses and can radiate radio frequency energy and, if not installed and used in accordance with the instructions, may cause harmful interference to radio communications. However, there is no guarantee that interference will not occur in a particular installation. If this equipment does cause harmful interference to radio or television reception, which can be determined by turning the equipment off and on, the user is encouraged to try to correct the interference by one or more of the following measures:

- Reorient or relocate the receiving antenna.
- Increase the separation between the equipment and receiver.
- Connect the equipment into an outlet on a circuit different from that to which the receiver is connected.
- Consult the dealer or an experienced radio/TV technician for help.

Safety Precautions

In this manual, operations and handling of the unit which are hazardous are described using the following marks to prevent personal injury or property damage to the user and others.

⚠ WARNING	**Ignoring this mark could result in the possibility of serious injury or even death.**
⚠ CAUTION	**Ignoring this mark could result in the possibility of injury or physical damage.**

△	**This mark indicates a "Warning" or "Caution".** A graphic may be shown inside the mark to describe the warning or caution more specifically.
⃠	**This mark indicates a forbidden action.** A graphic may be shown inside the mark to describe the forbidden action more specifically.
●	**This mark indicates actions that must be performed.** A graphic may be shown inside the mark to describe the action to be performed more specifically.

Power supply

- Make sure the power supply used is always within the following range.
  Power supply : **100 to 240 V AC, 50/60 Hz**
- When you power other appliances from the same AC outlet, make sure that the combined power consumption does not exceed the power supply capacity.
  Rated current (Rated power) : **1.8 to 0.7 A (175 W)**
  SIDE AIR KIT disconnected : **1.3 to 0.6 A (130 W)**

⚠ WARNING

Use only the power supply voltage specified on the main nameplate.
Using other voltages could result in a fire or an electrical shock.

Make sure that the combined power consumption of the appliances to be connected does not exceed the capacity rating of the power outlets or plug receptacles.
Exceeding the capacity rating could cause the power outlets, plug receptacles, or power extension cords to overheat and catch a fire.

Operating environment

Operate this unit in the following environment.

- where the temperature range is between 5 and 35°C/41 and 95°F (-10 to 50°C/14 to 122°F in storage)
- where the humidity range is between 20 and 80% RH (10 to 90% RH in storage, however no condensation)
- which is not subject to direct sunlight
- which is reasonably free from dust
- which is subject to little or no vibration
- which is free from air-borne salt
- where there are no harmful chemicals
- where the unit is not exposed to water

⚠ WARNING

Keep this unit and the power cord away from heaters and heater vents.
Excessive heat could melt the cover or power cord covering, and result in a fire or an electrical shock.

Do not place metal objects or vessels containing liquids on top of the unit.
The entry of any metal object or liquid could result in a fire or an electrical shock.

Do not insert any metal or easily-combustible object inside this unit.
This could result in a fire or an electrical shock.

Do not use flammable sprays inside or near the unit (e.g. when cleaning the unit).
Such flammable gas may ignite and cause a fire or combustion.

⚠ CAUTION

Do not install this unit in a location where there is excessive humidity or where contact with water is possible.
Poor choice of location could result in deterioration of the insulation, a fire or an electrical shock.

Install this unit on a level, stable stand or floor, with sufficient space around it.
Failure to do so could result in the unit overturning and causing injury.

Disconnect the power plug from the power outlet before attempting to move this unit.
Failure to do so could result in power cord damage, a fire or an electrical shock.

Always disconnect the power plug from the power outlet when the unit is not to be used for an extended period.
Failure to do so could result in a fire due to leakage current if the insulation should deteriorate.

Maintenance / others

WARNING

Do not damage the power cord or power plug.
Do not scratch, alter, bend, twist, pull or place heavy objects on the power cord or power plug.
This could result in damage, a fire or an electrical shock.

Do not touch the power switch with wet hands.
Otherwise electric hazards may occur.

Do not remove the cover or back panel.
This unit contains high-voltage components that could cause an electrical shock.

Do not disassemble, modify or repair this unit.
There is a danger of fire, electrical shock or injury.
Contact your dealer when repairs are necessary.

If any foreign object such as metal or liquid should enter this unit, immediately turn the unit off at the power switch and disconnect the power plug from the power outlet.
Failure to do so could result in a fire or an electrical shock.
Contact your dealer immediately.

Before cleaning this unit, turn the unit off at the power switch and disconnect the power plug from the power outlet.
Accidental operation of the unit during cleaning could result in injury.

If the unit emits smoke, unusual heat or unusual odors, immediately turn the unit off at the power switch and disconnect the power plug from the power outlet.
Failure to do so could result in a fire or an electrical shock.
Contact your dealer immediately.

Remove any dust that accumulates on the power plug prongs and the surface of the plug from which the prongs extend.
Accumulated dust could result in a fire.

Always grip the plug when disconnecting the power plug from the power outlet.
Forcibly pulling on the power cord could cause damage, resulting in a fire or an electrical shock.

CAUTION

Because of its structure, there are tiny protruding objects inside the unit. Be careful when putting your hand inside the unit.
This could result in injury.

Do not touch or insert foreign objects into any rotating part during operation.
This could result in injury.

WARNING / CAUTION labels

"WARNING" and "CAUTION" labels are pasted on the machine to ensure user safety.
Do not remove or change them.
When the labels become dirty or are lost, be sure to contact your dealer for a new one.

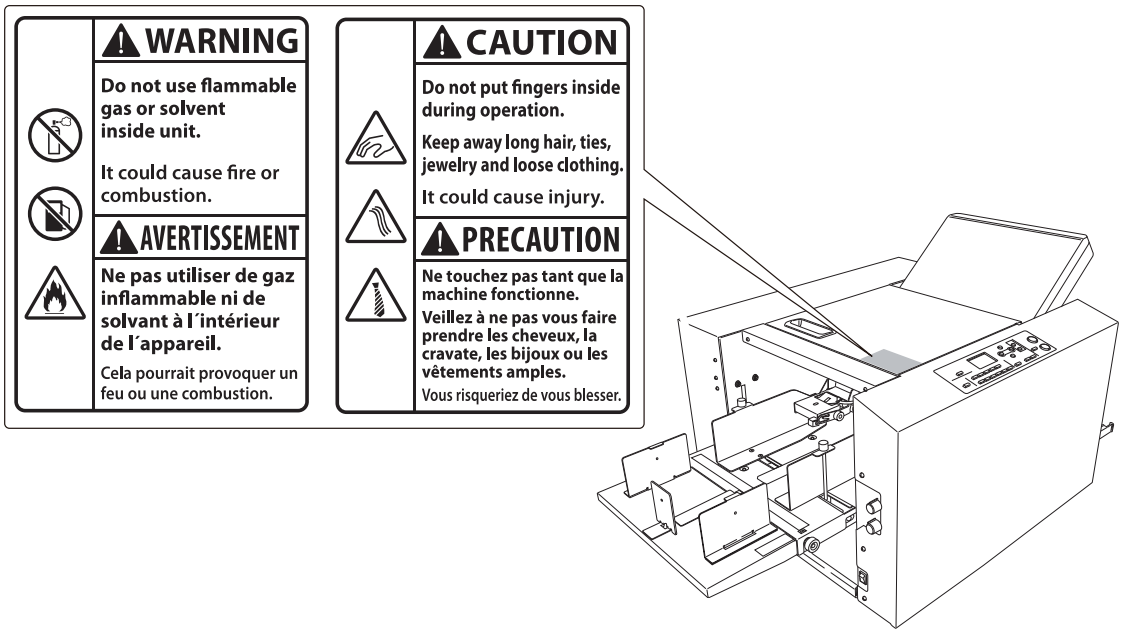

Contents

Chapter 4
Cleaning the Unit

Chapter 5
Trouble Guide

Chapter 6
Appendix

Chapter 1 Before Operation

1. Features

- This machine is a desktop paper folder. Standard folding of standard paper can be easily controlled and operated from the control panel.
- This machine is designed to fold paper into six popular folds.

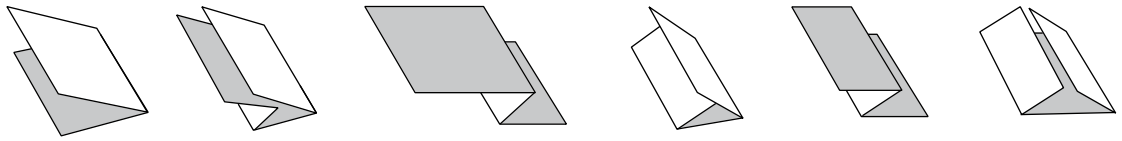

Single fold | Double fold | Irregular accordion fold-out | Letter fold | Accordion-fold | Gate fold

- Single folded paper can also be cross folded.

2. Names and Functions of Components

2-1. External parts

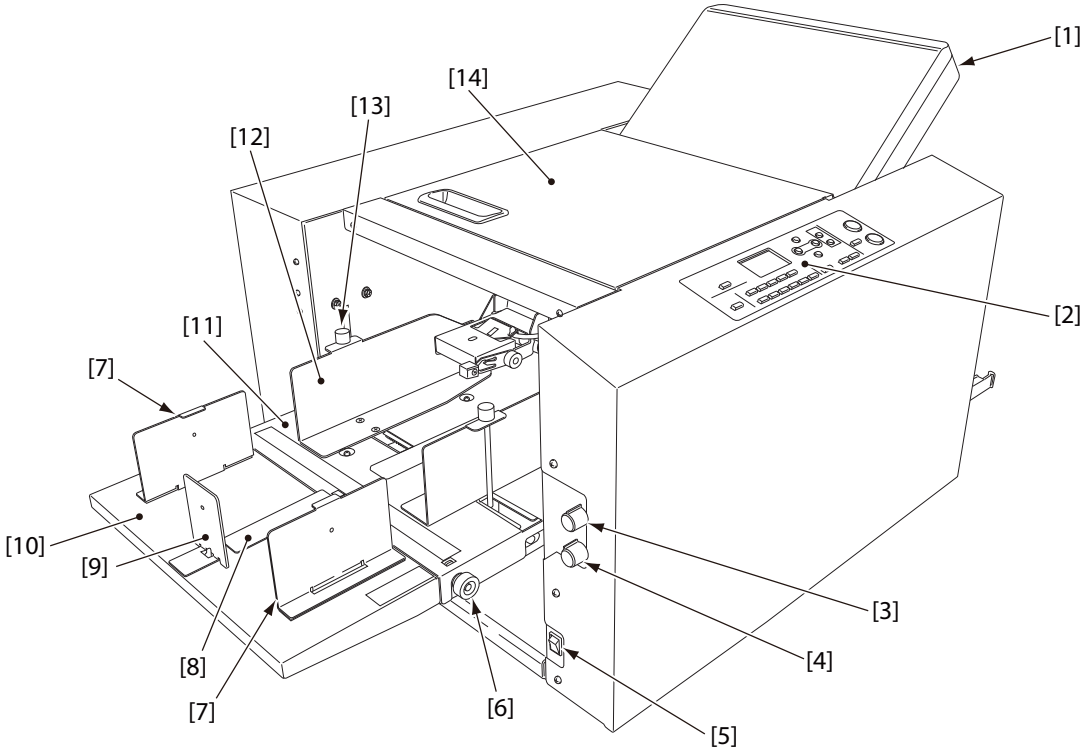

No.	Name	Function
[1]	Fold plate 1	Guide plate for deciding the paper folding position.
[2]	Control panel	Use this panel to enter information to operate the machine **(p.1-7)**.
[3]	Separating air adjustment	For adjusting the separating air amount.
[4]	Separator adjustment	For adjusting the height of the separator.
[5]	Power switch	Refer to Chapter 2 "1. Turning On/Off the Power" **(p.2-1)**.
[6]	Skew correction knob	Use this knob to correct the folding misalignment in both directions.
[7]	Side guide unit	Use these guides to hold both sides of paper when stacking long size paper.
[8]	Plate unit	Use this unit to send separating air toward the rear end of paper when stacking long sheets of paper.
[9]	Trail edge guide unit	Holds the back edge of paper stacked on the paper feed tray.
[10]	Auxiliary paper feed tray	For stacking paper on the paper feed tray in a stable condition. Do not lean on the auxiliary paper feed tray or hold on to it to lift up the machine.
[11]	Paper feed tray	For stacking the paper to be folded. Do not lean on the paper feed tray or hold on to it to lift up the machine.
[12]	Paper feed guide	Holds both sides of paper when the paper is stacked on the paper feed tray.
[13]	Guide fixing screw	For securing the paper feed guide.
[14]	Top cover	Safety cover to prevent the user from touching the moving parts.

2-2. Internal parts (paper feed section)

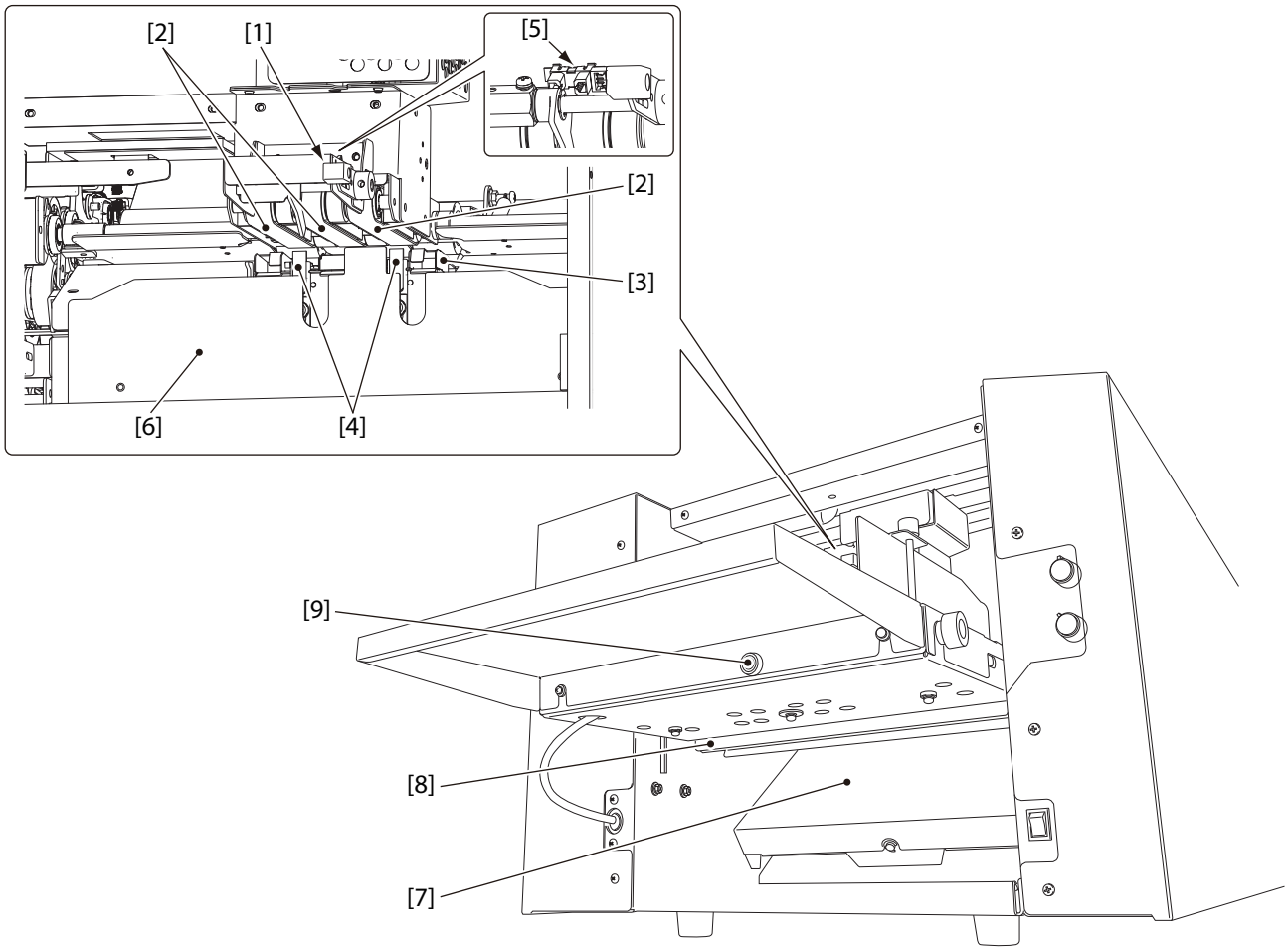

No.	Name	Function
[1]	Stack height sensor adjustment	For adjusting the distance between the paper and suction belt.
[2]	Suction belt	Sucks and conveys paper.
[3]	Separating-air duct	Blows out air for separating paper stacked on the paper feed tray.
[4]	Separator	Prevents double-feed.
[5]	Paper feed tray level sensor	This is a sensor to decide the height of paper which is floating by separating air.
[6]	Shutter	Adjusts the amount of separating air blown out. Use the separating air adjusting knob to adjust the amount.
[7]	Fold plate 2	Guide plate for deciding the paper folding position.
[8]	Safety lever	This lever prevents fingers from getting caught when the paper tray is lowered.
[9]	Knob screw	This screw secures the auxiliary paper feed tray in place.

2-3. Internal parts (top cover section)

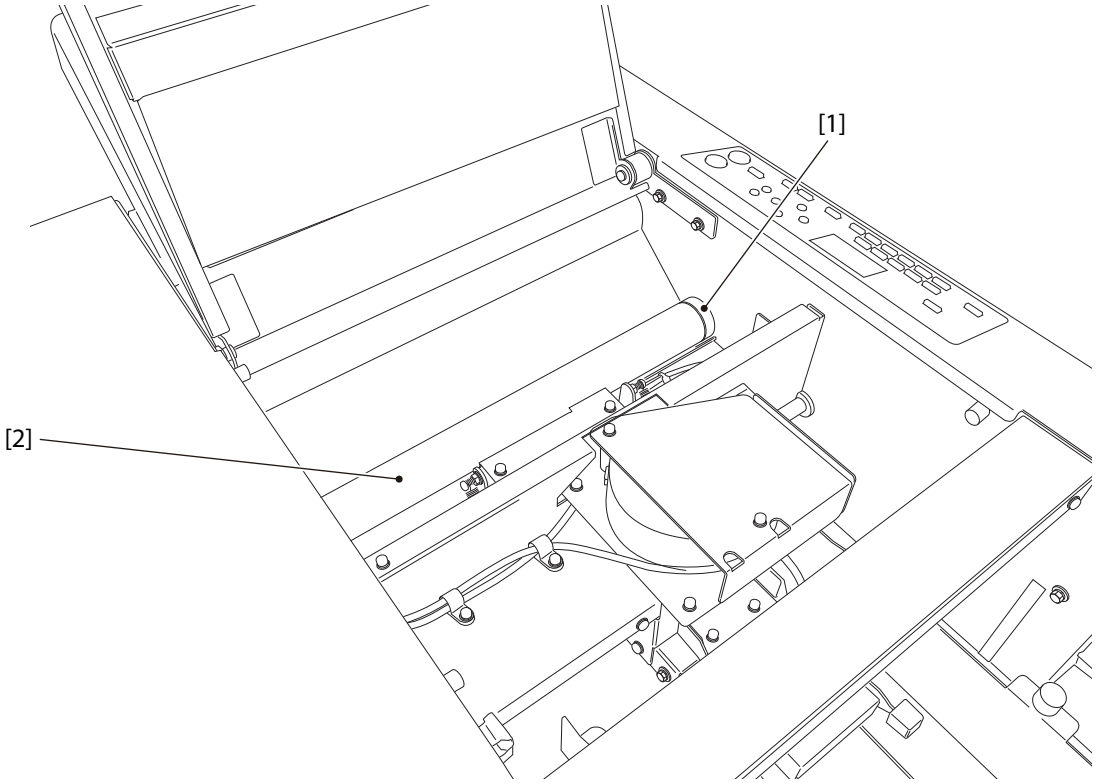

No.	Name	Function
[1]	Jam correction knob	For rotating the folding rollers when paper has jammed inside the unit or when cleaning the unit.
[2]	Folding roller	These rollers are used to fold paper. This machine is equipped with four rollers to make six types of folds.

2-4. Internal parts (paper ejection section)

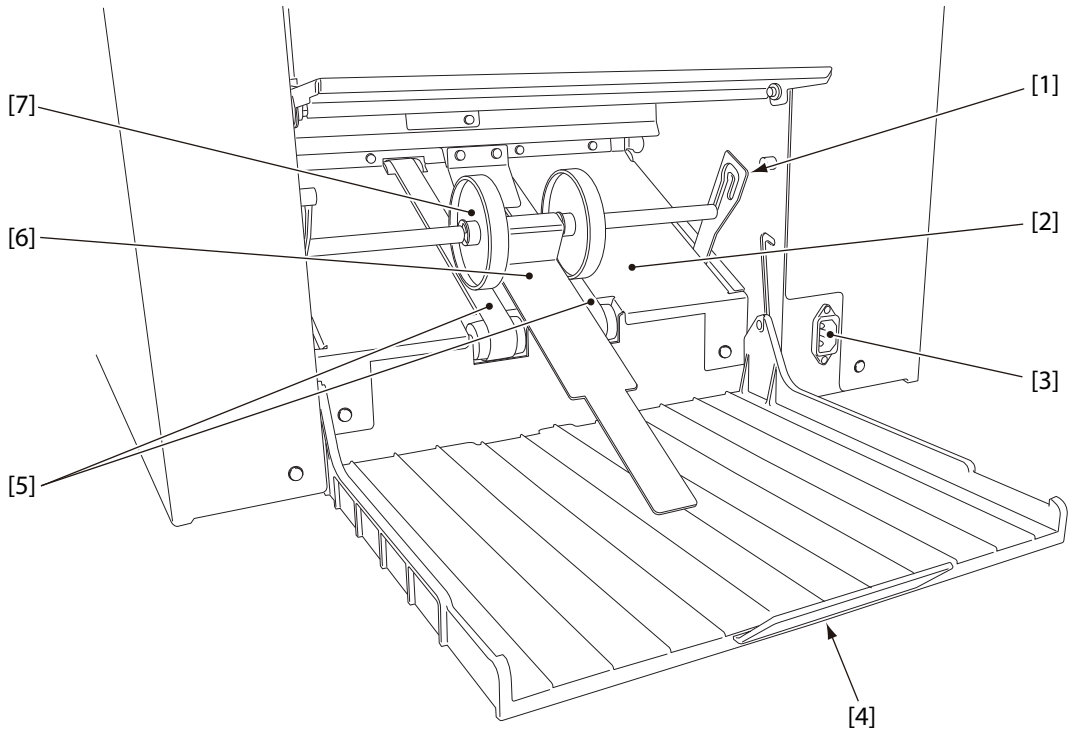

No.	Name	Function
[1]	Stacker roller lever	This lever suppors the stacker roller. The height of the roller can be adjusted.
[2]	Ejecting section	For receiving folded paper ejected out.
[3]	Power inlet	Connector for the power cord.
[4]	Paper receiving tray	For stacking folded paper.
[5]	Stacker belt	For ejecting folded paper.
[6]	Auxiliary paper ejection guide	Holds the ejected paper from the top and prevent the mis-alignment of paper stacked on the paper feed tray.
[7]	Stacker roller	It holds down the ejected paper and supports conveyance of paper.

2-5. Accessories

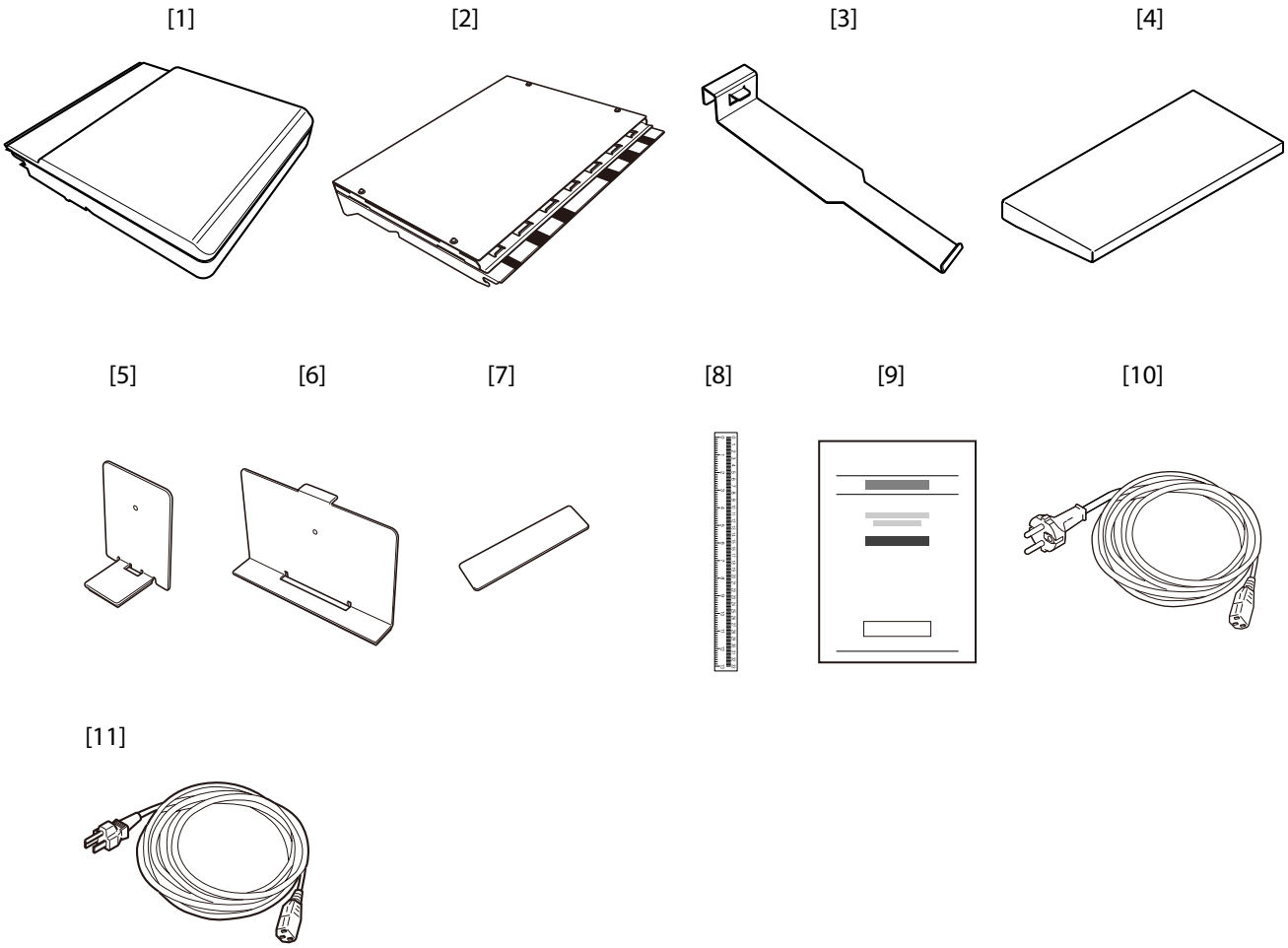

No.	Name	QTY	Function
[1]	Fold plate 1	1	
[2]	Fold plate 2	1	
[3]	Auxiliary paper output guide	1	
[4]	Auxiliary paper feed tray	1	
[5]	Trail edge guide unit	1	
[6]	Side guide unit	2	
[7]	Plate unit	1	
[8]	Scale label	1	
[9]	Instruction manual	1	This manual
[10]	Power cord	1	Applicable for 220 to 240 V
[11]	Power cord	1	Applicable for 120 V

3. Names of Control Panel

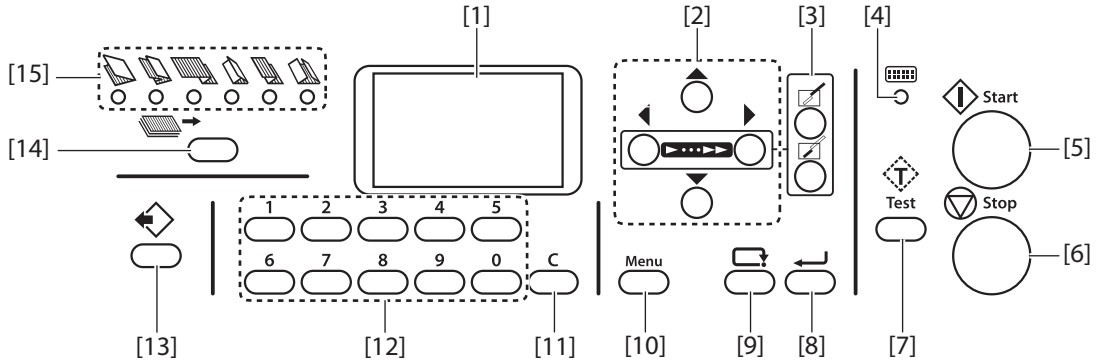

No.	Name	Function
[1]	LCD display	Displays the menus or error messages.
[2]	▲▼◀▶ key	Used to change a value. On the top screen use the ◀ or ▶ key to change processing speed and the ▲ or ▼ key to raise or lower the paper feed tray.
[3]	(Stopper adjustment) key	Press to open Stopper adjustment window of folding plates 1 and 2.
[4]	Lamp	When the machine is in the power saving mode, the lamp blinks slowly.
[5]	Start key	Press to start paper folding.
[6]	Stop key	Press to stop paper folding.
[7]	Test key	Press to test fold. Paper thickness can be stored by test folding while double-feed detection is [ON].
[8]	(Enter) key	Press to enter the settings. Stopper adjustments can be stored by holding down this key on the top screen.
[9]	(Cancel) key	Use to cancel setting data. Forces eject while cancel key and test key are pressed down at the same time. Forces eject at folding plates while cancel key and clear key are pressed down at the same time.
[10]	Menu key	Press to display the setting menu window.
[11]	C (Clear) key	Press to cancel the number of sheets to be processed, selected items or settings.
[12]	Keypad	Use to input numeral value.
[13]	(Custom folding) key	Press to select the registered settings of custom folding.
[14]	(Folding mode) key	Press to select the folding mode from six standard folding modes. When the machine is switched on, the single folding mode lamp will light up. Lighting up will shift to the right every time the key is pressed. Single folding mode will be performed when custom folding is selected.
[15]	Standard folding lamp	Of the six standard folding modes, the lamp of the one selected will light up. All the lamps will go out when the custom folding mode is selected.

4. Screen Descriptions

4-1. Top screen

The top screen is a screen displayed first when you turn on the power.

No.	Information displayed		Details
[1]	Paper size		Displays the detected paper size. [A3][A4][A5][B4][B5][B6]/ [LGR][LGL][LTR][INV][STMT] The following will be displayed when custom folding is set.(*: Memory number) [IR *] Set values are displayed when paper size is manually set. If paper size is not displayed, the paper size is not detected and folding cannot be started.
[2]	Machine status		Displays the current status of the machine.
[3]	Special function setting display		Displays the settings of each special function.
			Double-feed detection is set. (State where the test folding is not performed)
			Double-feed detection is set. (State where the test folding is performed)
			Double-feed detection is set. (Double-feed detection is not performed because the paper length is 250 mm/9.84 inches or less.)
			Interval function is set.
			The refold mode is set.
			The stopper fixation mode is set.
			Counting up.
			Counting down.
			Paper ejection amount: [Large] is selected.
[4]	Stopper correction		Displays the adjustments of the fold plates 1 and 2. The stopper position will be displayed when custom fold is set.
[5]	Process Speed		The processing speed which is set is displayed with an icon.
[6]	Number of processed sheets		Displays the number of processed sheets.

4-2. Menu list

The function menu is displayed if you press the menu key with the top screen displayed.
Press the menu key to change setting windows.
The function screen can be switched with the ▲ key or ▼ key.
Determine the selected item with the ↵ key.

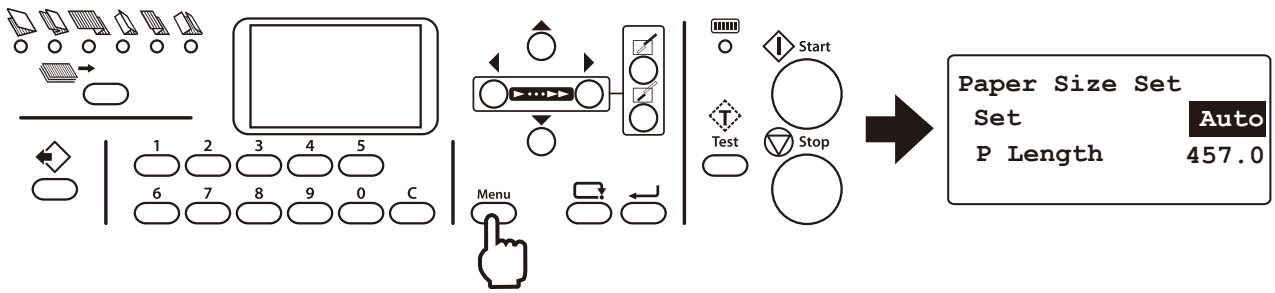

The following menu items are provided with this machine.

Item		Details
Air Adjust	Sep. Air (Separating Air)	* : Settings (20 to 99) The side fan air amount is displayed only when attaching the optional products.
	Pickup Air	
Paper Size Set	Set	[Auto][Man] Default: [Auto] Sets automatic detection of paper size or manual input of paper size.
	P Length (Paper Length)	* : Settings (182 to 457.2 mm/7.17 to 18 inches)
Irreg Set (Registration for irregular folding)	P Length	* : S ettings (182 to 457.2 mm/7.17 to 18 inches)
	Fold1	* : Settings (42.0 to 325.0 mm/1.65 to 12.80 inches) Adjusts the stopper position of the folding plate 1. There is a limit to the settings according to the length of paper used.
	Fold2	* : Settings (0 or 47.0 to 217.0 mm/0 or 1.85 to 8.54 inches) Adjusts the stopper position of the folding plate 2. There is a limit to the settings according to the length of paper used and the position of folding plate 1 stopper.
Interval Setting	Set	[ON][OFF] Default: [OFF] Select ON to use interval function.
	No of Sec (The Number of Seconds)	[3][5][10] Default: [5] Sets the number of seconds to be interrupted during folding operation.
	No of Sht (The Number of Sheets)	* : Settings (1 to 999) Default: [1] Sets the number of sheets to be suspended during folding operation.
D-Feed Detect (Double Feed Detection Setting)	Set	[ON][OFF] Default: [OFF] Select ON to detect double-feed.
	Thickness	[Thin][Thick] Default: [Thin] Select the thickness of paper for which double-feed is detected.
Other Setting	Feed Interval (Paper feed interval setting)	[Slow][Normal][Fast] Default: [Normal] Sets the paper feed timing.
	Stack Roll Adj (Stacker Roller Adjustment)	* : Settings (1 to 16) Adjusts the position of the stacker roller.
	Belt Convey Vol (Ejecting Belt Conveyance Volume)	[Large][Normal] Default: [Normal] Sets the paper ejection conveyance amount.

Item			Details
Other Setting	Oper Mode (Operation Mode Settings)		[Normal] [Last Fold][Stopper Fixed] Default: [Normal] Sets operations of folding stopper on the folding plates 1 and 2, when the power is turned on. [Normal] : Start up the machine in the normal setting state, when the power is turned on. [Last Fold] : Start up the machine with the same settings as the last time it was used. [Stopper Fixed] : Start up in the same conditions at all times.
	Test Feed Set		* : Settings (1 to 3) Default: [2] Sets the number of sheets to perform test feeding.
	Power Save Set	Set	[ON][OFF] Default: [ON] Sets the power saving mode to ON or OFF.
		Time	* : Settings (15 to 60) Sec Default: [30]
	Alarm Setting	Set	[ON][OFF] Default: [OFF] Sets to the alarm (buzzer sound) setting when leaving the machine unused.
		Time	* : Settings (5 to 120) Min Default: [60]
	Detect OFF (Detection OFF Setting)	Load (Load Paper)	[ON][OFF] Default: [ON] Sets the detection of paper stacked.
	Default setting	Speed	* : Settings (0 to 6) Default: [5] Sets the value to be used when the power is turned on. Set to [0] for folding thin paper mode.
		D-Feed (Double-feed)	[ON][OFF] Default: [OFF]
	Idling		[ON][OFF] Default: [OFF] Sets to the idling setting depending on whether to use at the time of occurrence of mis-feed or double-feed.
	Tone		[ON][OFF] Default: [ON] Sets the buzzer to ON or OFF.
	mm/inch Setting		[mm][inch] Default: [mm] Sets the unit to be displayed to [mm] or [inch].
	Tray Desc Amt (Paper Feed Tray Descending Amount)		[Not Descend][Small][Normal][Large] Default: [Large] Sets how far the paper feed tray is lowered.

4-3. Stopper adjust screen

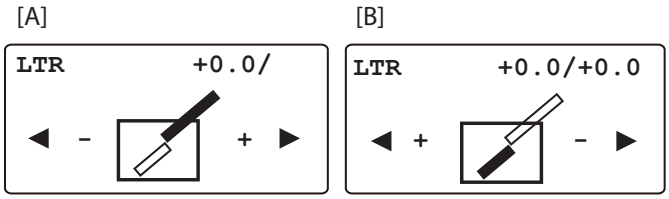

Screen	Item	Display	Details
[A]	Folding plate 1 stopper correction	**	* : Settings (-5.0 to 5.0/-0.20 to 0.20)
[B]	Folding plate 2 stopper correction		

4-4. Operation on the menu screen

The basic operation on the menu screen is as follows. Here how to open [Air Adjust] window is explained as an example.

1 Press Menu while the top screen is displayed.

A setting window will be displayed.

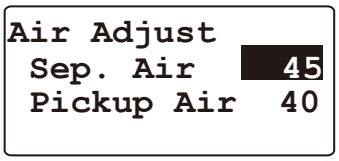

2 Press the ▲ key or ▼ key to select [Sep. Air].

3 Press the ↵ key.

At this stage numerical values can be changed.

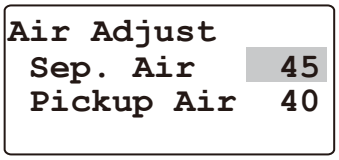

4 Input numerical values on the keypad or with the ◀ or ▶ key.

The numerical values can be changed by [5] using the ◀ or ▶ key.

5 Press the ↵ key.

The figures are set.

6 Press the ▭ key.

Returns to the top screen.

4-5. Classification of buzzer sounds

In this machine the buzzer sounds in confirmation when setting on the control panel or paper runs out on the paper feed tray, etc. Classification of the sounds is as follows.

"pi" : Operational sound at the time of normal key operation

"pipi" : Warning alarm at the time of mis-operation, mis-feed of paper, or paper empty

"pii" : At the start of folding operation or end of normal folding operation
In confirmation of change of various settings

"piipii" : An error such as a paper jam

"piipiipii" : An error, contact Formax service technician for assistance

5. Paper Types and Sizes

Paper type

Fine quality paper, Rough paper, Stencil paper, Recycle paper : 52.3 to 157 g/m^2/14 to 40 lb
Art paper, Coated paper : 73.3 to 157 g/m^2/19 to 40 lb

Paper size

Standard paper (The standard paper can be used only when it is stacked in the machine direction.)

Paper size	W × L (mm)	Paper size	W × L (mm)	Paper size	W × L (inches)
A3	297 x420	B4	257 x 364	LGR	11 x 17
A4	210 x 297	B5	182 x 257	LGL	8.5 x 14.0
A5	148 x 210	B6	128 x 182	LTR	8.5 x 11.0
				INV	7 x 8.5
				STMT	5.5 x 8.5

Non-standard paper

Width : 120 to 311 mm/4.73 to 12.24 inches

Length : 182 to 457.2 mm/7.17 to 18.00 inches

* The aspect ratio for non-standard paper is 1:1 to 2.2:1.

Some limitations in setting and paper quality may be applied depending on paper size.

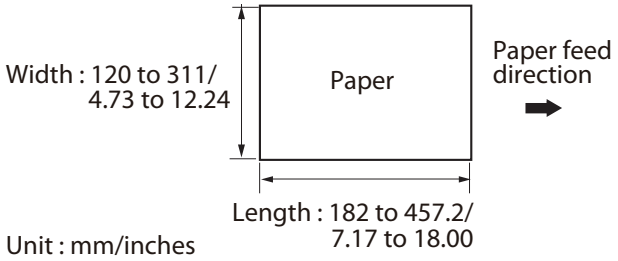

Paper that cannot be used with this machine

- Paper out of specifications
- Curled paper
- Wavy paper

6. Handling Paper

6-1. Paper used

- Make sure that the printing ink on the paper has dried completely prior to use.

Note
- **Wet ink or ink that is not completely dried may stain the folding roller causing trouble such as smearing on paper.**
- **Use of paper printed with special types of ink may cause the folding roller to swell or deform, and folding misalignment may occur.**

- Paper may not be fed smoothly into the folding plate or deformed folding may occur depending on different environmental factors (temperature, humidity), paper ream weight, paper type, paper grain direction if curled paper is used. Make sure to flatten curled paper or paper with folded lines before use.
- Separate the sheets of paper well before stacking them.

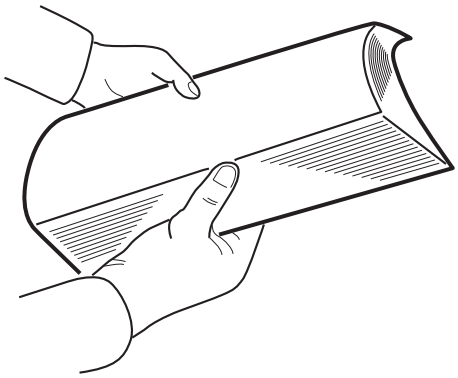

6-2. Precautions on stacking paper

- Stack paper striking the leading edge of paper lightly at the shutter.

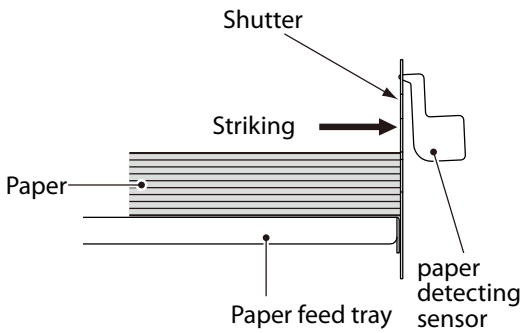

Note **If there is some clearance between the leading edge of paper and shutter, the paper detecting sensor does not function properly.**

- Do not stack the sheets of paper on the paper feed tray with the sides of sheets unaligned or some sheets protruding from the stack.

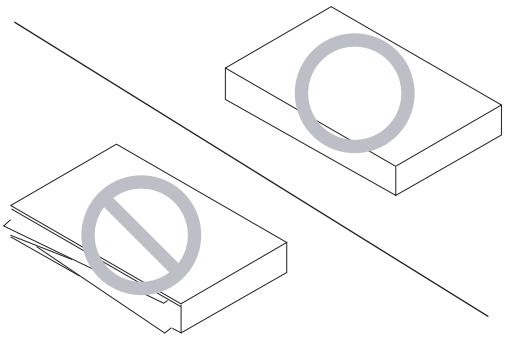

Note **Processing with sheets unaligned on the right or left side may cause such trouble as folding misalignment and jamming.**

- Do not stack paper on the paper feed tray with the lead and trail edges unaligned or some sheets protruding out.

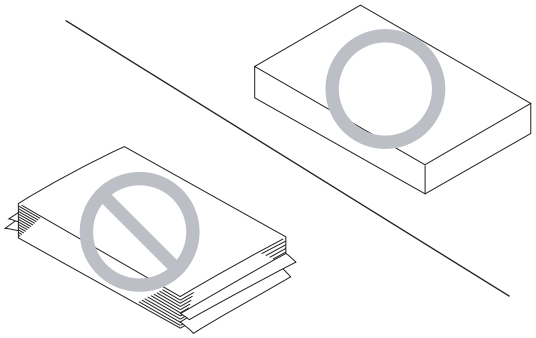

Note **Processing with sheets unaligned on the lead and trail edges may lead to unstable feed causing such trouble as mis-feed and double-feed.**

7. Workflow

The flowchart below illustrates the flow of basic operation. For details, refer to the text and relevant pages.

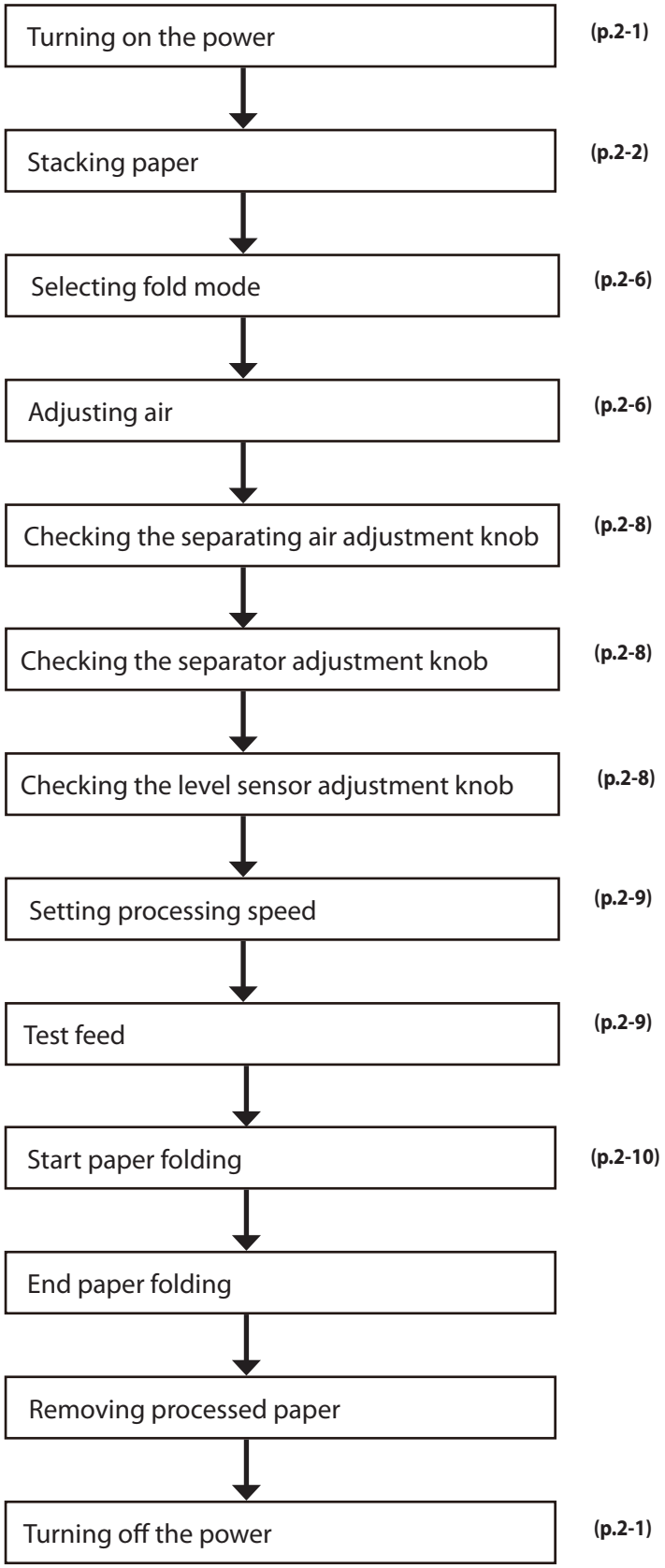

Memo

Chapter 2 Basic Operation

1. Turning On/Off the Power

Note
- **Be sure to use the attached power cord.**
- **Make sure that the power plug is connected to the wall socket.**

1-1. Turning on the power

Set the power switch to the " I " side.

WARNING

Do not touch the power switch with wet hands.
Otherwise electric hazards may occur.

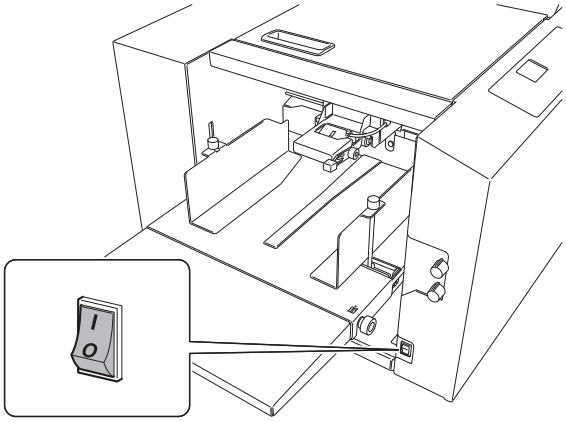

1-2. Turning off the power

Set the power switch to the " ○ " side.

2. Stacking the Paper

2-1. Before stacking paper

Checking the front/back,top/end of paper

Check the "front/back" and "top/end" of paper when stacking paper on the paper feed tray.

Check for folding misalignment, and check "front/back" and "top/end" of paper when checking the finished fold after test folding.

When paper is stacked with the gray surface on the obverse side and white surface on the reverse side on the paper feed tray, and processing is completed in the standard folding mode, the folded paper is as shown in the figure.

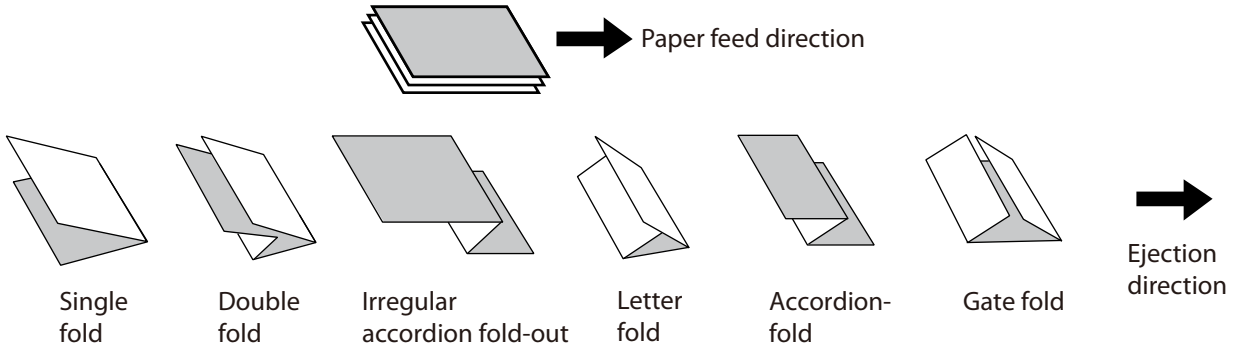

2-2. Stacking paper

⚠ CAUTION

Do not put fingers inside during operation.
Keep away long hair, ties, jewelry and loose clothing.
It could cause injury.

1 **Loosen the guide fixing screw.**

2 **Stack paper on the paper feed tray.**

Push in the paper until the lead edge touches the shutter below the paper feed inlet slightly.

Memo The round hole (upper side) on the paper feed guide indicates the maximum paper stacking height (50 mm/1.97 inches).

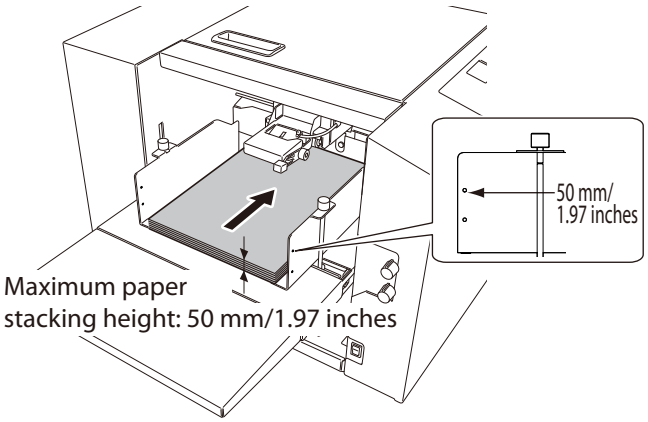

3 Adjust the paper feed guide to match the paper size.

Set the paper feed guide in such a way that it touches the paper lightly.

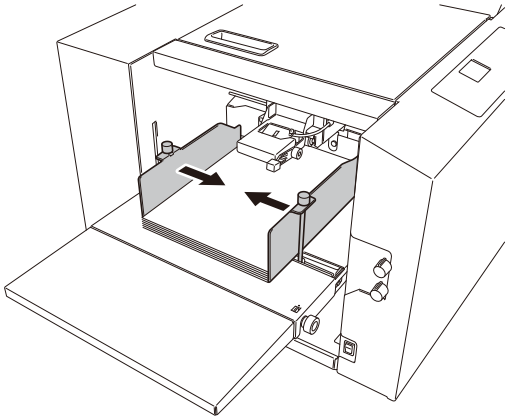

Note

- **Do not press the paper with the paper feed guides too strongly. Otherwise, paper feed errors such as mis-feed will occur.**
- **If the guides are positioned incorrectly, the automatic paper size detection function will not work, and the test key and start key,etc. will not operate.** **(p.2-5)**

4 Tighten the guide fixing screws.

Note **Make sure to tighten the guide fixing screws on both right and left sides. If the screws are not fixed, the paper feed guide moves during operation, and folding misalignment may occur in the right and left direction.**

5 Set the trail edge guide unit to the rear end of paper.

Set the trail edge guide unit so that it will be in contact with the paper lightly.

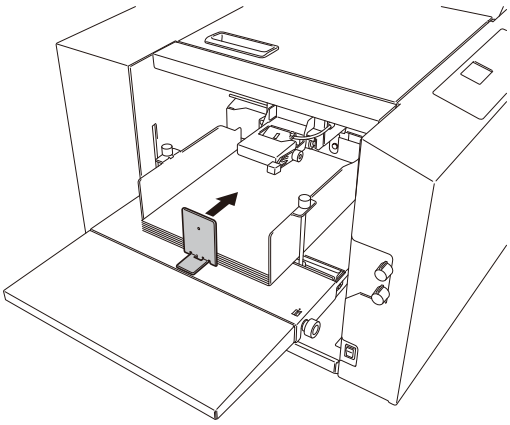

Note **The trail edge guide unit must be set in place without fail. When starting the machine without setting the back edge stack guide, the paper will be blown by separating air.**

When processing long paper, use the plate unit and side guide unit.

Range of paper length: A3 (LGR) or more, or back edge of paper is positioned at more than two-third of auxiliary paper feed tray.

6 **Set the plate unit onto the auxiliary paper feed tray.**

Be sure to set the plate unit so that it does not extend beyond the rear end of paper.

7 **Attach the side guide unit on each side of paper.**

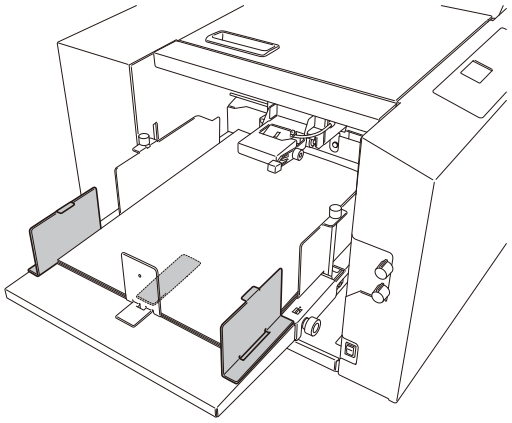

Note **Attach the side guide unit leaving some clearance between the side guide unit and paper. However, if the side guide unit is set leaving too much clearance between the side guide and paper, accuracy of feeding may be lowered, and folding misalignment may be apt to occur. If the side guide unit is set striking at the paper, double-feed or mis-feed may be caused.**

Automatic rise/descent of the paper feed tray

- When paper is stacked on the paper feed tray, the paper feed guides are set, and the start or test key is pressed, the paper feed tray rises automatically.

Note **When using large or heavy paper, the paper feed tray may become over stacked and may not be able to rise due to paper weight. In such cases, stack less paper.**

- The paper feed tray will descend under the following conditions or after the following operations.
  Paper is removed from the paper feed tray.
  Paper runs out during folding operation.
  The stop key is pressed during folding operation to stop processing.
  The ▼ key is pressed in the stand-by state. (The paper feed tray descends while the ▼ key is being pressed.)

3. Standard Folding of Standard Paper

Ref. For the standard paper sizes, refer to Chapter 1 "5. Paper Types and Sizes" (p.1-12).

Six standard folds are available as shown below.

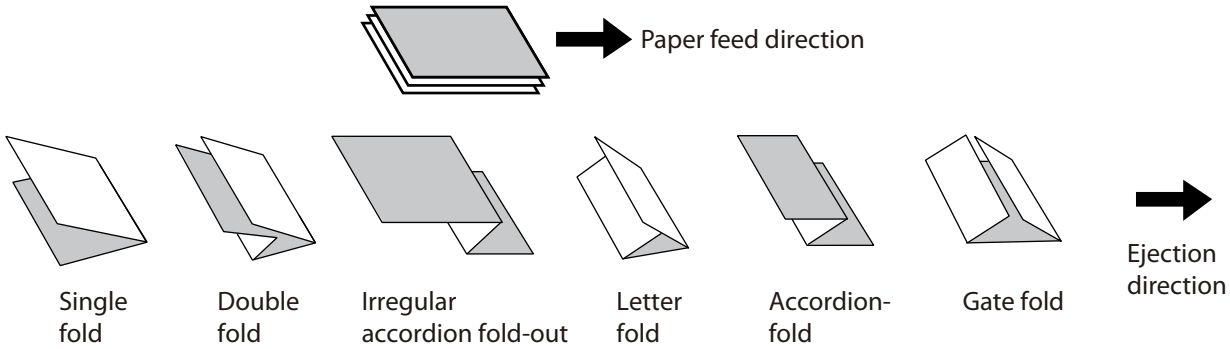

Depending on the thickness of paper, this machine may not be able to process some standard sheets of paper.

⚠ CAUTION

Do not put fingers inside during operation.
Keep away long hair, ties, jewelry and loose clothing.
It could cause injury.

Automatic detection of standard paper size

When paper for all paper sizes is stacked in the machine direction shown in the figure, paper is detected as standard paper.

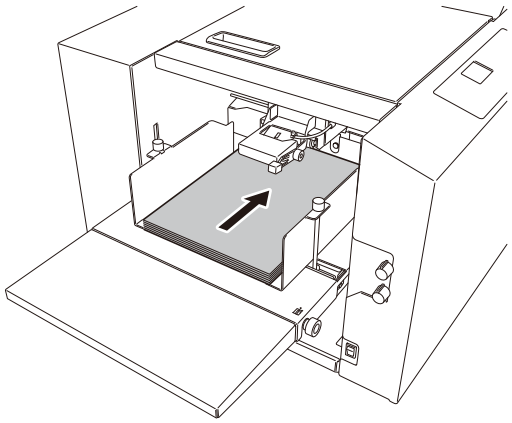

Note **When standard paper is stacked on the paper feed tray sideways, the paper size is detected as wrong paper size. Use paper as non-standard paper when stacking paper sideways.**

Ref. For the use of non-standard paper, refer to Chapter 3 "2. Standard Folding of Non-Standard Paper" (p.3-7).

1 **Check the paper size display.**

The paper size is not displayed if the paper feed guide is not positioned as specified even though the size of standard paper is used. If not, reset the paper feed guide to a correct position.

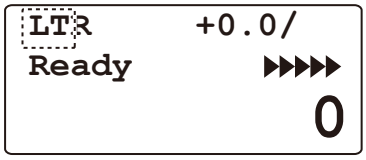

2 **Press the fold type key to select the correct fold.**

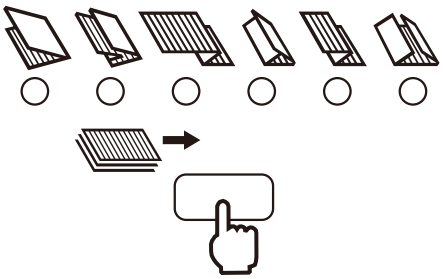

3 **Press the menu key to display [Air Adjust] window.**

4 **Select [Sep. Air] using the ▲ or ▼ key.**

5 **Press the ↵ key.**

At this stage numerical values can be changed.

6 **Input numerical values on the keypad or with the ◀ or ▶ key.**

The numerical values can be changed by [5] using the ◀ or ▶ key.

Setting range: 20 to 99

Refer to "Air Adjustment Table" for appropriate volume of [Sep. Air].

7 **Press the ↵ key.**

The figures are set.

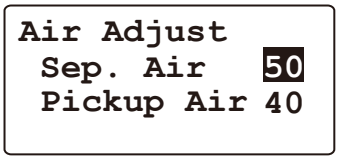

Memo

- The volume of [Sep. Air] can be checked by pressing the test key or start key while [Air Adjust] window is displayed.
- Press either of the stop key, ▭ key, or menu key to stop separating air.
- When the air volume is appropriate, the paper does not flap but it floats as air reaches the rear end of paper as shown in the right figure.

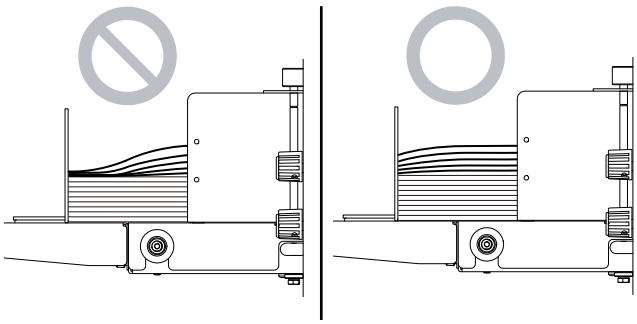

8 **Set [Pickup Air] by following the same procedures as step 4 to 7.**

Setting range: 20 to 99

Refer to "Air Adjustment Table" for appropriate volume of [Pickup Air].

9 **Press the ⇨ key.**

Returns to the top screen.

Memo Also use the menu key to return to the top screen when [Air Adjust] is set in the idling state.

Air Adjustment Table

The air adjustment table is a guide to set numerical values. The setting range of each setting is the following numerical value ±5. The numerical values in ( ) in the table refer to the setting range for the paper.

Set each air volume to a smaller value than that of the table, when handling thin and flimsy paper such as rough paper and recycled paper. The larger the air volume, the more folding misalignment may occur.

Change the numerical value when double-feed or mis-feed occurs even though the values are set according to the air adjustment table.

		A3 / LDGR		A4 / LGL,LTR		A5 / INV, STMT	
Paper quality	**Paper ream weight (g/m² / lb)**	**[Sep. Air]**	**[Pickup Air]**	**[Sep. Air]**	**[Pickup Air]**	**[Sep. Air]**	**[Pickup Air]**
Fine quality paper	52.3/14	35	30 (25 to 40)	35	30	40	30
	64/16	40	35	40	35	45	30
	81.4/22	50	45	45	40	50	35
	104.7/28	60	45	50	45	50	40
	127.9/34	65	50	55	45	50	40
	157/40	75	50	60	50	50	45
Coated paper	73.3/19	45 (40 to 55)	40 (35 to 50)	40	35	45	30
	79.1/21	50	40 (35 to 50)	45	40	45	35
	84.9/22	55	45	45	40	45	35
	104.7/28	65	50	55	45	50	40
	127.9/34	75	50	60	50	50	40
	157/40	85	55	75	50	70	45

		B4		B5		B6	
Paper quality	**Paper ream weight (g/m² / lb)**	**[Sep. Air]**	**[Pickup Air]**	**[Sep. Air]**	**[Pickup Air]**	**[Sep. Air]**	**[Pickup Air]**
Fine quality paper	52.3/14	40	35	40	30	40	30
	64/16	40	35	45	35	45	30
	81.4/22	45	40	50	40	50	35
	104.7/28	55	45	55	45	50	40
	127.9/34	60	45	60	50	60	40
	157/40	65	50	60	50	65	40
Coated paper	73.3/19	45	35	40	30	45	35
	79.1/21	45	40	45	35	45	35
	84.9/22	50	40	50	40	50	40
	104.7/28	60	45	55	45	50	40
	127.9/34	70	50	60	45	50	40
	157/40	80	50	60	50	70	40

10 Check that the separating air adjustment knob is set to [2].

- Larger settings increase and smaller settings decrease the amount of air.
- Set the air volume to [4] to [5] as paper is heavy when handling large size paper.
- Set the knob to [1] when using small size thin paper.

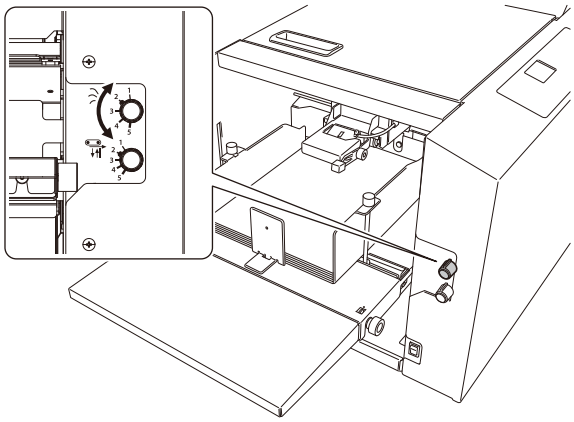

11 Check that the separator adjustment knob is set to [2]. (The separator should be lightly in contact with the suction belt.)

- The larger the setting, the wider the space between the separator and the suction belt.
- Turn the knob towards [3] if mis-feed occurs.
- Turn the knob towards [1] if double-feed occurs.

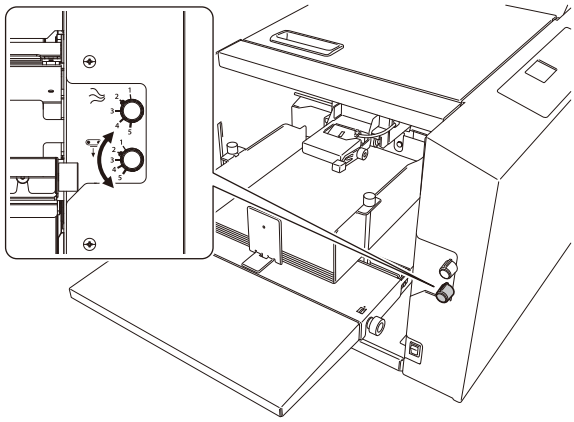

12 Check that the stack height sensor adjustment knob is set to the standard position (the second scale from the bottom).

- Setting the knob to the upper scales (round hole) lowers feeding position, and setting the knob to the lower scales raises feeding position.
- Lower the sensor knob by one scale if mis-feed occurs.
- Raise the sensor knob by one scale if double-feed occurs.

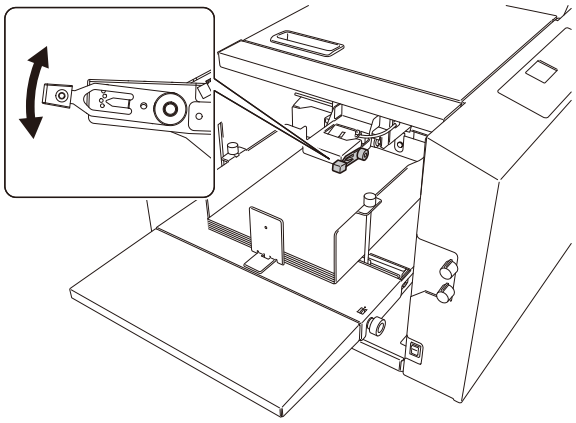

Note **A feeding error may occur when stopping feeding paper with the scale of stack height sensor adjustment knob set to the first scale, and restarting feeding paper with smaller amount of paper on the paper feed tray. If so, match the stack height sensor adjustment knob with paper and set it to the following position.**

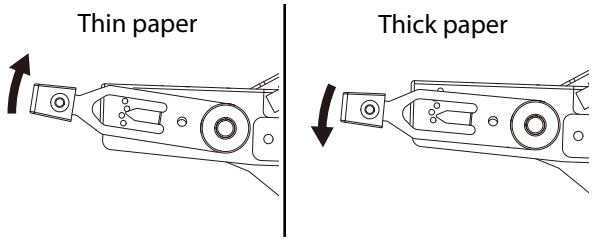

- **Thin paper: between the second scale and third scale from the bottom**
- **Thick paper: between the first scale and second scale from the bottom**

13 Press the ◀ or ▶ key to set the processing speed.

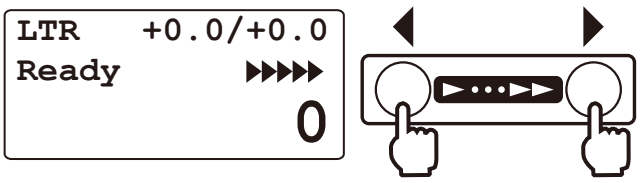

The default of processing speed is [5]. Folding misalignment, etc. may occur depending on the paper used and folding mode. If so, lower the processing speed.

When paper jam or abnormal folding occurs by using thin and flimsy paper, adjust the processing speed referring to "Thin paper mode". (p.3-18)

The processing speed can be changed during folding process or in the idling state. (p.3-32) However, folding misalignment may be caused by changing the processing speed too much.

14 Adjust the position of the paper receiving tray.

Set to [A] to stack ejected paper diagonally.

Set to [B] to stack ejected paper straight.

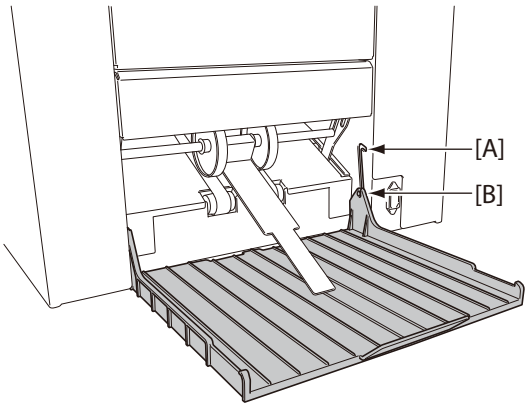

Ref. Refer to Chapter 3 "6. Stacking the Folded Paper" (p.3-18).

15 Press the test key.

Perform test folding.

Test folded paper is not counted in the number of sheets processed.

Note If this machine does not start by pressing the test key, automatic detection of paper size may not function. Check the paper feed guide is set appropriately to the scale of paper size.

16 Check the finish of test folding.

Check the last sheet of test folded paper for folding misalignment.

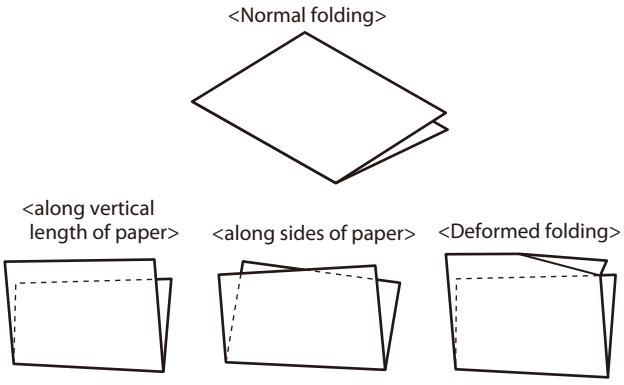

Ref. When folding misalignment occurs, refer to Chapter 3 "1. Correcting Folding Misalignment" (p.3-1)

17 Select the method of using the counter.

- The counter can be used in two ways "Count Down" and "Count Up".

  Count up : Press the clear key and set the counter to "0" to start operation.

  Count down : Enter the number of sheets to be processed on the keypad to start operation.

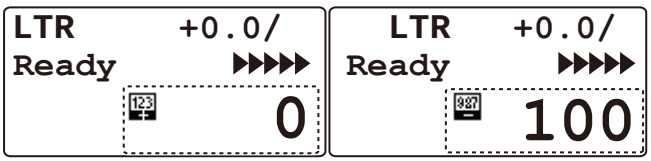

Count up Count down

- Up to four digits (9999) can be displayed.
- An icon will be displayed by pressing the start key.

Count up

When pressing the clear key, the buzzer sounds "pi", and the count display will return to [0].

When pressing the start key without pressing the clear key, paper folding operation will restart and the number of sheets processed will be counted up.

The machine will stop operations when the count display shows [9999]. Press the clear key to return the count display to [0] and press the start key when processing paper folding continuously.

Count down

The machine will stop when the number of sheets set for processing is processed, and the count display will return to the number of sheets set for processing.

When pressing the clear key, the buzzer sounds "pi", and the use of the counter will return to "Count up" instead of "Count down".

The count display will return to [0].

When pressing the start key without pressing the clear key, paper folding operation will restart and the number of sheets processed will be counted down.

After that, the procedures vary depending on the use of the counter.

For counting down, refer to procedure 18.

For counting up, refer to procedure 19.

18 Press the keypad to enter the number of sheets to be processed.

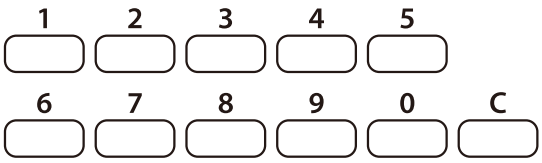

19 Press the start key to start folding.

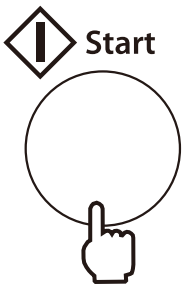

- Press the stop key to interrupt or stop operation. Press the start key again to restart operation.
- When paper stacked on the paper feed tray runs out, the machine will stop automatically, and [No Paper] will be displayed on the LCD display. When paper is stacked on the paper feed tray, the display of [No Paper] will disappear, and the machine will be in the stand-by state.
- When double-feed or paper size error occurs during folding operation, the fed paper is processed and ejected, but the number of processed sheets will not be counted.
- When paper jams at the paper ejection section, paper may be fed after detecting paper jam at the paper ejection section, but the number of sheets processed will not be counted.

4. Storage of Machine

Store the machine as follows, when it is not being used.

1 **Turn off the power switch.**

> **⚠ WARNING**
>
> **Do not touch the power switch with wet hands.**
> Otherwise electric hazards may occur.

2 **Disconnect the power plug from the outlet.**

3 **Remove the power cord from this machine.**

> **⚠ WARNING**
>
> **Do not touch the power plug with wet hands.**
> Otherwise electric hazards may occur.

4 **Remove the auxiliary paper ejection guide.**

5 **Hang the hook section of the paper receiving tray.**

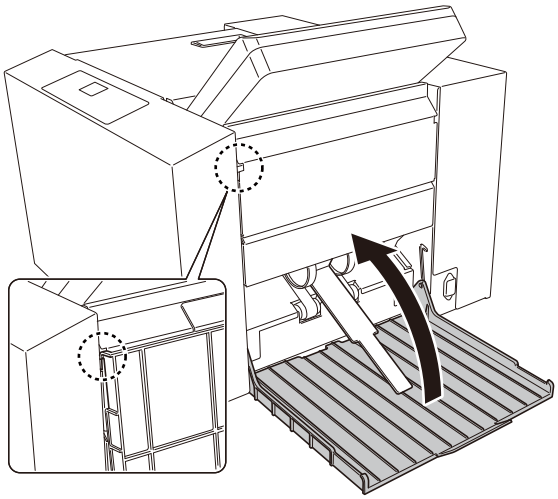

6 **Hang the auxiliary paper ejection guide on the paper receiving tray.**

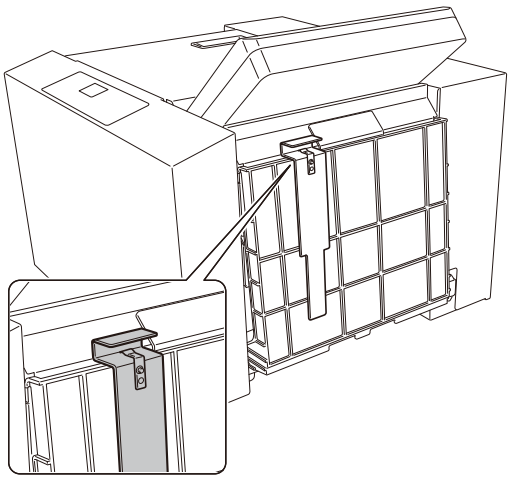

7 **Loosen the setting screws.**

8 **Remove the auxiliary paper feed tray.**

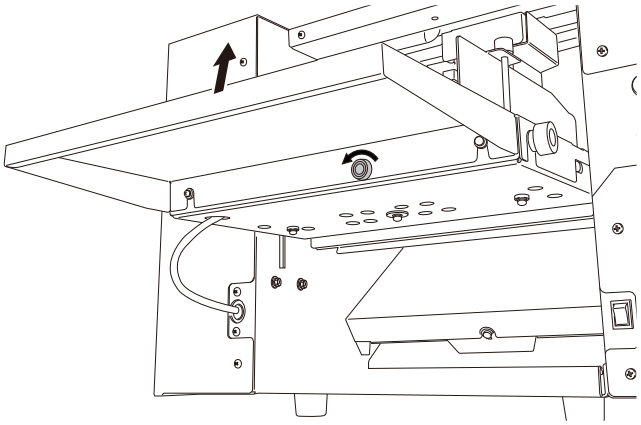

Chapter 3 Advanced Operation

1. Correcting Folding Misalignment

Folding misalignment consists of "folding misalignment along the sides of the paper" and "folding misalignment along the vertical length of the paper". Other than this, "deformed folding" may also occur due to paper characteristics, etc.

Depending on the usage environment (temperature and humidity), paper type, thickness, paper grain direction, trimming accuracy, and printing states folding misalignment may occur.

⚠ CAUTION

Do not put fingers inside during operation.
Keep away long hair, ties, jewelry and loose clothing.
It could cause injury.

1-1. Adjusting fold misalignment on right and left sides

When the folded paper is misaligned along the sides, correct using the skew correction knob of the paper feed tray.

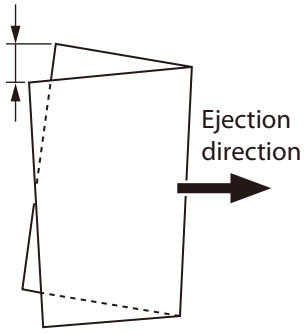

1 **Check that the paper feed guides are set correctly.**

Gaps between the paper and paper feed guides will cause folding misalignment along the sides to occur easily.

Proceed to step 2 if the paper feed guides are set properly.

Perform test folding after resetting the paper feed guides. Proceed to step 2 if folding misalignment occurs after setting the paper feed guides properly.

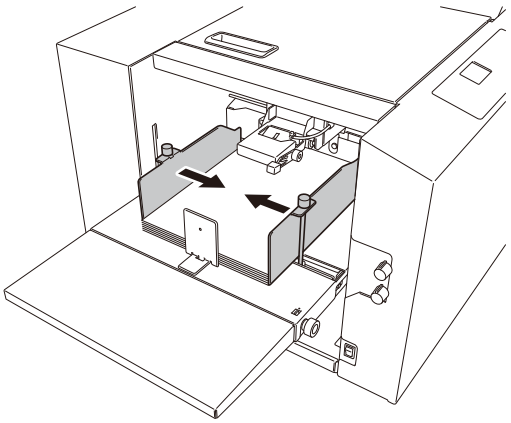

2 Remove the paper stacked on the paper feed tray.

Adjustments cannot be made effectively by adjusting folding misalignment with skew correction knob when the leading edge of paper is in contact with the shutter.

3 Rotate the skew correction knob and adjust.

Rotate the skew correction knob by a quarter to half turn to adjust. Check the skew correction effect (test fold) and adjust.

Folding misalignment A

Rotate the knob in the clockwise direction. The leading edge of paper on the right side (on the control panel side) will be fed earlier.

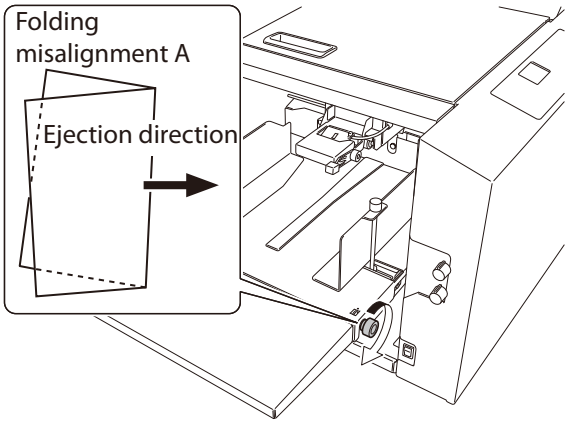

Folding misalignment B

Rotate the knob in the counterclockwise direction. The leading edge of paper on the left side (on the non-operator's side) will be fed earlier.

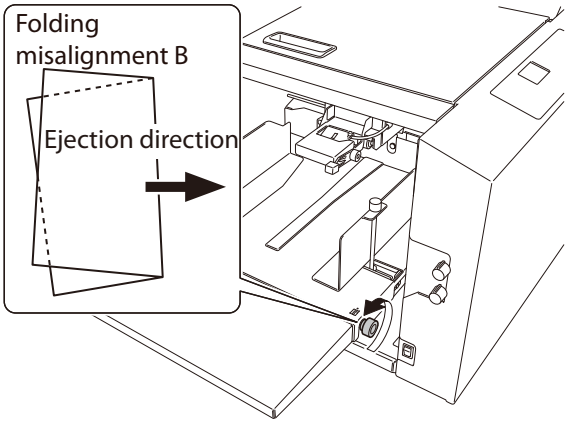

4 Stack paper on the paper feed tray.

Push in paper so that the edge of paper comes lightly in contact with the shutter.

5 Perform test folding.

6 After completing folding operations,return the skew correction knob to the standard position.

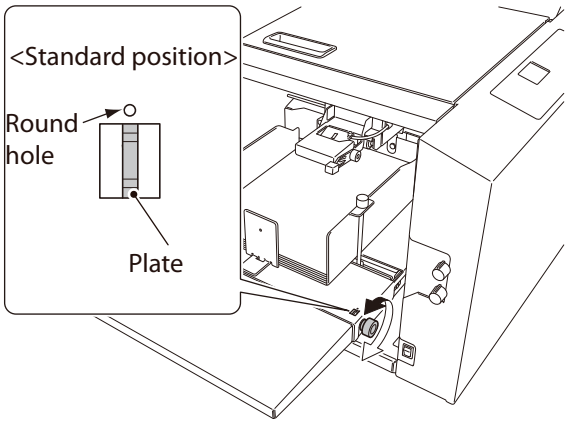

1-2. Adjustment the folding misalignment in the up and down direction

When the folded paper is misaligned along the vertical length, adjust the positions of the folding stopper of folding plates 1 and 2 to correct the misalignment.

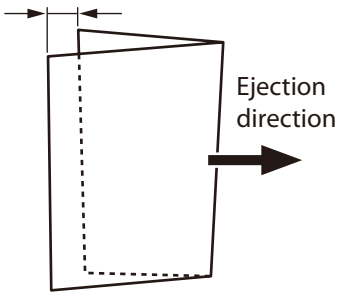

Adjustable range and correction restrictions

- For standard folding, the adjustable range using the stopper adjustment key is within ± 5 mm/0.20 inch from the center of the paper.
- The positions of the folding stoppers of folding plates 1 and 2 may not be adjustable to ± 5 mm/0.20 inch according to the length of the paper used.
- For [Special folding] and [Stopper fixing mode], the folding positions are set directly according to the paper length, and the adjustable range of ± 5 mm/0.20 inch is not restricted.

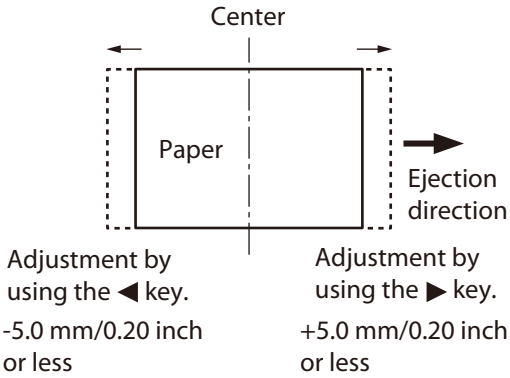

The restricted folding plate and adjustment details differ according to the folding mode and paper length.

For EU

Folding mode	Restricted range of paper length*	Restricted folding plate and adjustment key
Double fold	182 to 203.9 mm	Correction by ▶ key of folding plate 2
Irregular accordion fold-out	182 to 182.7 mm	Correction by ◀ key of folding plate 1
	182 to 199.9 mm	Correction by ▶ key of folding plate 2
Gate fold	424.4 to 432 mm	Correction by ▶ key of folding plate 1
	421.8 to 432 mm	Correction by ◀ key of folding plate 2

For Noth America

Folding mode	Restricted range of paper length*	Restricted folding plate and adjustment key
Double fold	7.17 to 8.02 inches	Correction by ▶ key of folding plate 2
Irregular accordion fold-out	7.17 to 7.90 inches	Correction by ▶ key of folding plate 2
Gate fold	16.69 to 17.00 inches	Correction by ▶ key of folding plate 1
	16.56 to 17.00 inches	Correction by ◀ key of folding plate 2

* Range of paper length which cannot be corrected to ± 5 mm/0.20 inch. The adjustment value differs according to the paper length.

Adjustment folding misalignment along vertical length of paper by folding mode

Adjust folding misalignment along the vertical length of the paper in standard folding using the folding stopper Adjustment keys of folding plates 1 and 2.

Folding plate 1			
Folding mode		**State of folded plane A**	**Adjustment key**
Single fold	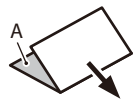	A is long	▶ key
		A is short	◀ key
Double fold	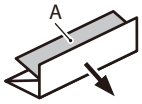	A is long	▶ key
		A is short	◀ key
Irregular accordion fold-out	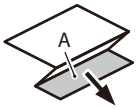	A is long	◀ key
		A is short	▶ key
Letter fold	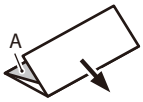	A is long	▶ key
		A is short	◀ key
Accordion fold	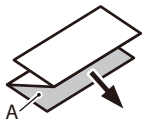	A is long	◀ key
		A is short	▶ key
Gate fold	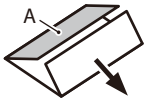	A is long	▶ key
		A is short	◀ key

Folding plate 2			
Folding mode		**State of folded plane B**	**Adjustment key**
Single fold	* Folding plate 2 is not used in single folding.		
Double fold	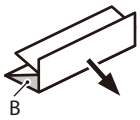	B is long	▶ key
		B is short	◀ key
Irregular accordion fold-out	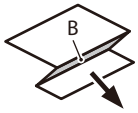	B is long	▶ key
		B is short	◀ key
Letter fold	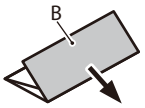	B is long	◀ key
		B is short	▶ key
Accordion fold	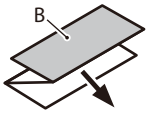	B is long	◀ key
		B is short	▶ key
Gate fold	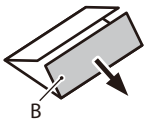	B is long	◀ key
		B is short	▶ key

Adjustment method

Adjust the positions of the folding stopper using the stopper adjustment keys of folding plates 1 and 2 on the control panel.

Folding plate 1 :The folding stopper of the folding plate 1 moves in the direction of A shown in the figure by pressing the ▶ key, and moves in the direction of B shown in the figure by pressing the ◀ key.

Folding plate 2 :The folding stopper of the folding plate 2 moves in the direction of A shown in the figure by pressing the ◀ key, and moves in the direction of B shown in the figure by pressing the ▶ key.

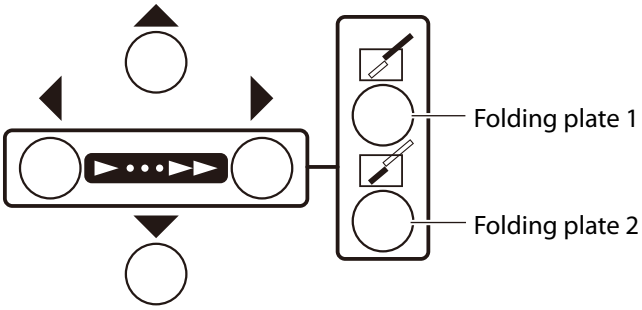

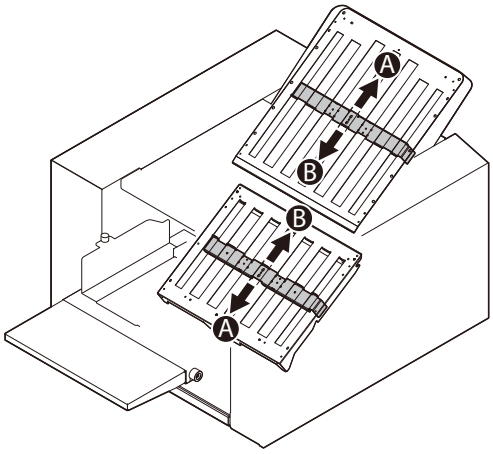

The folding stopper moves by 0.1 mm/0.004 inch every time the stopper adjustment key is pressed. While holding down the stopper adjustment key, the value will continue to increase/decrease within the setting range.

The value adjusted with the stopper adjustment key will be displayed on the top right section of the LCD display.

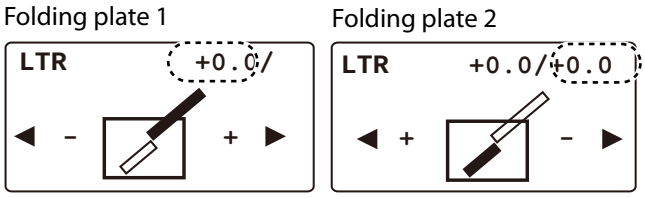

Example of operation procedures of single folding with folded plane A longer by 1 mm/0.03 inch shown in the figure.

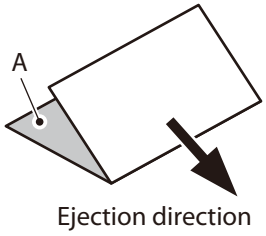

1 **Press the stopper adjustment key of the folding plate 1.**

The numerical value can be changed at this stage.

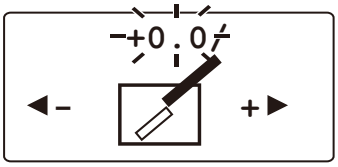

2 **Press the ▶ key to set the value to [+0.5].**

3 **Press the ↵ key.**

The changed value is set.

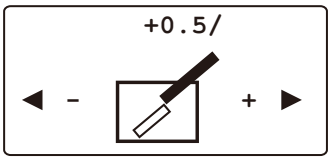

Ref. The changed value will be cleared by turning off the power switch. For registration of the changed value, refer to "Registering the adjusted value" (p.3-6).

Memo The numerical value of the folding plate can be changed by inputting the numerical value on the keypad.

Inputting plus numerical value	: Input the numerical value to be changed on the keypad.
Inputting minus numerical value	: Change the display to minus with the ◀▶ key and input the numerical value to be changed on the keypad.

Registering the adjusted value

Adjustment values of folding misalignment in the vertical direction of thirty-six registration types including six standard folding modes x six types of standard paper sizes can be registered. (Thirty registration types in total including five types of standard paper sizes for North America) Once adjustment values are registered, folding operation can be performed in the same condition as the registration is made without registering the same adjustment.

Register the values by press and hold the ↵ key after adjustment the folding plates 1 and 2. The buzzer sounds "pii" once and the adjustment value is registered.

To cancel the adjustment value already registered, set the adjustment value to [0] using the keypad, ◀ or ▶ or key and press and hold the ↵ key. The buzzer sounds "pii" once and the adjustment value is registered.

Memo Adjusted folding stopper position can be registered to special folding. **(p.3-8)**
The adjustment values cannot be registered for standard folding of non-standard paper.

1-3. Deformed folding

The paper may not be folded properly due to the characteristics of paper. In such cases, check the following points.

- Do not use paper outside the specifications.
  Particularly, deformed folding occurs frequently in the use of thin and flimsy paper.
- Lower the processing speed when deformed folding occurs for thin and flimsy paper. **(p.3-18)**
- Separate paper well prior to stacking. **(p.1-13)**
- Stack paper on the paper feed tray after aligning well, and set the paper feed guides at the correct positions. Also tighten the fixing screws of the paper feed guides firmly. **(p.2-2)**

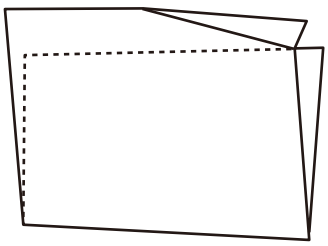

2. Standard Folding of Non-Standard Paper

Standard folding of non-standard paper is a method to register the paper length of paper other than standard paper, select the standard folding mode, and fold paper.

Paper other than the six standard paper is called non-standard paper. (Five standard paper sizes for North America)

The foldable sizes are as follows. (Width x Length)

Maximum : 311 x 457.2 mm/12.24 x 18.00 inches

Minimum :120 x 182 mm/4.73 x 7.17 inches

When performing gate fold, the maximum paper length is 432.0 mm/17.00 inches.

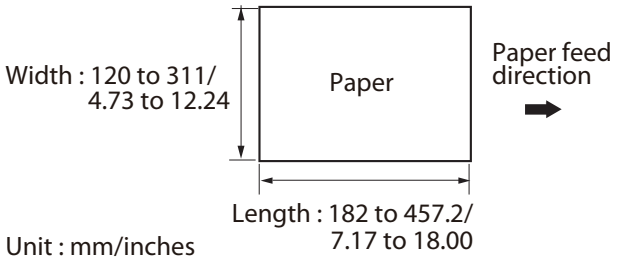

- **Standard paper which is stacked on the paper feed tray in the long edge feeding direction is considered non-standard paper.**
- **The paper sizes which can be used may vary with the paper type, thickness, and printing state.**

Ref. For standard folding, refer to Chapter 2 "3. Standard Folding of Standard Paper" (p.2-5).

1 **Press the menu key to display [Paper Size Set].**

```
Paper Size Set
 Set          Auto
 P Length     457.0
```

2 **Press the ↵ key.**

Setting can be changed at this stage.

3 **Press the ◀ key or ▶ key to select [Man].**

```
Paper Size Set
 Set           Man
 P Length     457.0
```

4 **Press the ↵ key.**

The selected details are set.

5 **Press the ▼ key to select [P Length].**

```
Paper Size Set
 Set           Man
 P Length     457.0
```

6 **Press the ↵ key.**

Setting can be changed at this stage.

7 **Input the paper length on the keypad.**

Setting range :182.0 to 457.2 mm/7.17 to 18.00 inches

When the numerical value has been input, press the clear key to clear the value before inputting.

Example of inputting a value: Input [2500] when the paper length is 250 mm.

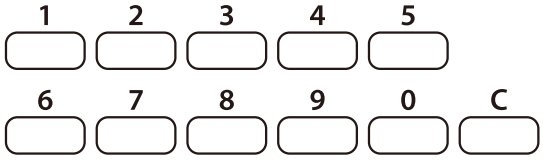

8 **Press the ↵ key.**

The input value will be set.

```
Paper Size Set
 Set          Man
 P Length   250.0
```

9 **Press the ▭ key.**

```
250      +0.0/
Ready        ▶▶▶▶▶
                 0
```

The procedures taken after that will be the same as the ☞ Chapter 2 "3. Standard Folding of Standard Paper" (p.2-5).

3. Custom Folding

Custom folding is an operation method to fold paper at any position by specifying the folding stopper positions (folding position) of the folding plates 1 and 2.

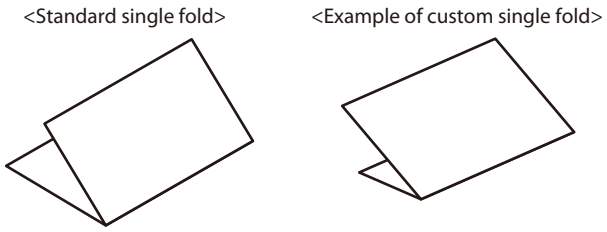

The foldable sizes are as follows. (Width x Length)

Maximum : 311 x 457.2 mm/12.24 x 18.00 inches

Minimum : 120 x 182 mm/4.73 x 7.17 inches

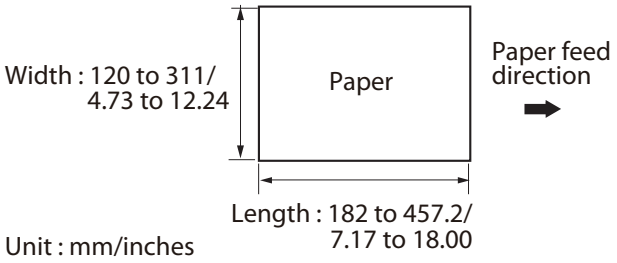

Note **The paper sizes which can be used may vary with the paper type, thickness, and printing state.**

The length of the folded plane (see figure on the right) which can be folded by folding plates 1 and 2 is restricted.

Folding plate 1 : 42 to 325 mm/1.65 to 12.80 inches

Folding plate 2 : 0 * or 47 to 217 mm/0 * or 1.85 to 8.54 inches

* As folding plate 2 is not used in single folding, it is 0 mm/0 inch.

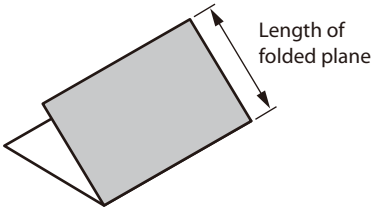

Incorrectly measuring the paper length or setting the folding stopper position can cause paper jamming inside the folding plate.

3-1. Operation

As an example of accordion-fold, operation procedures for custom folding are described with the following setting.

Paper size : A4 (210 x 297 mm/8.26 x 11.69 inches)
Fold1 : 85 mm/3.34 inches (length A)
Fold2 : 95 mm/3.74 inches (length B)

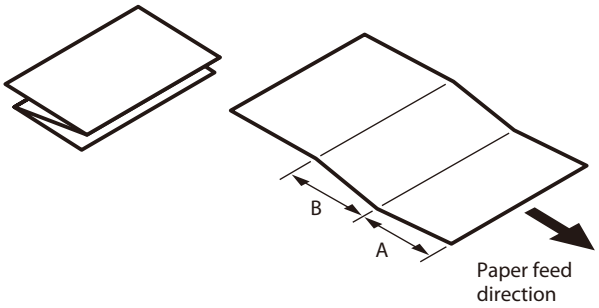

1 Prepare a folding sample manually using the paper to be folded.

2 Measure the length of the fold position of the sample.

3 Press the menu key to display [Irreg Set] display.

```
Irreg Set 00
 P Length
 Fold1
 Fold2
```

4 Input the registration number using the numerical keypad or the ◀▶ keys.

[00] cannot be used to input as a registration number.

```
Irreg Set 01
 P Length
 Fold1
 Fold2
```

For the registration number, refer to Chapter 6 "Specifications" (p.6-1).

5 Press the ↵ key.

The input registration number is set and [P Length] can be changed at this stage.

```
Irreg Set 01
 P Length   -0.0-
 Fold1       0.0
 Fold2       0.0
```

6 Input [P Length] using the numerical keypad.

Input [2970].

7 **Press the ↵ key.**

Input numerical value is set, and [Fold1] can be changed.

```
Irreg Set 01
 P Length   297.0
 Fold1       -0.0
 Fold2        0.0
```

8 **Input [Fold1] using the numerical keypad.**

Input [850].

9 **Press the ↵ key.**

Input numerical value is set, and [Fold2] can be changed.

```
Irreg Set 01
 P Length   297.0
 Fold1       85.0
 Fold2       -0.0
```

10 **Input [Fold2] using the numerical keypad.**

Input [950].

11 **Press the ↵ key.**

The input numerical value is set, and the display will return to the top screen.

```
Irreg Set 01
 P Length   297.0
 Fold1       85.0
 Fold2       95.0
```

The procedures taken after that will be the same as the ☞ Chapter 2 "3. Standard Folding of Standard Paper" (p.2-5)

The value of air volume of each fan, paper output amount, and stacker roller position that are changed during special folding will be registered automatically.

When the registered numerical value has been fine-adjusted

- Press and hold the ↵ key to register the numerical value after fine-adjusting the registered value using the stopper adjustment key. The buzzer sounds "pii" and the numerical value that has been fine-adjusted is registered.
- When turning off the power without registering the value, the fine-adjusted numerical value will be cleared.
- Air volume of each fan, paper output amount, and stacker roller position that are changed during special folding will be registered automatically.

3-2. Using the registered data

Press the custom folding key to select the registered data.

3-3. Locking the registered data

Lock the registered data to keep the value unchanged so that the registered data will be saved without being deleted mistakenly.

1 **Press the menu key to display the [Irreg Set] screen.**

2 **Select the registration number to be locked on the keypad or with the ◀ or ▶ key.**

3 **Press the stop key.**

The lock icon will be displayed to the right of the registration number.

Press the stop key again to release the lock.

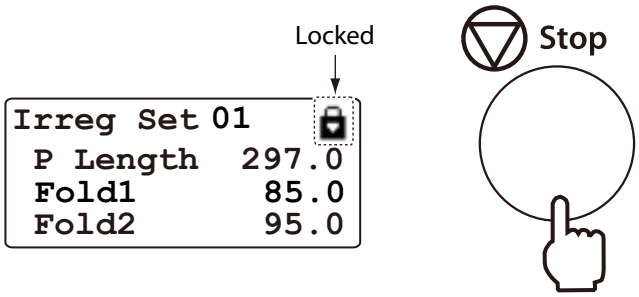

4 **Press the ⇨ key.**

Returns to the top screen.

Memo Even if paper folding is being processed using the locked data, the folding position can be fine-adjusted. (p.3-5)

Press and hold the ↵ key to register the fine-adjusted numerical value.

If there is no need to register the fine-adjusted numerical value, turn off the power to clear the value.

3-4. Clearing the registered data

1 **Press the menu key to display the [Irreg Set] screen.**

2 **Select the registration number to be cleared on the keypad or with the ◀▶ key.**

3 **Press the ↵ key.**

[P Length] can be changed.

4 **Press and hold the clear key.**

A buzzer sounds "pii" and the registered data will be cleared.

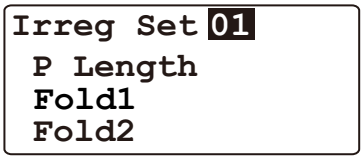

5 **Press the ⇨ key.**

Returns to the top screen.

3-5. Registering the folding value directly while processing

The current folding settings can be registered for later reference when performing operations under the same conditions.

Test fold or perform folding process, check folding misalignment, and fine-adjust when registering the value.

1 **Press the menu key to display the [Irreg Set] screen.**

2 **Input the registration number on the keypad or the ◀▶ key.**

```
Irreg Set 01
 P Length
 Fold1
 Fold2
```

3 **Press and hold the custom folding key.**

A buzzer sounds "pii", and the data will be registered.

4 **Press the ▭ key.**

Returns to the top screen.

4. Cross Fold

Cross fold is folding single-folded paper again as shown in the figure.

The upper limit of paper thickness is 127.9 g/m^2/34 lb for fine quality paper and 157 g/m^2/40 lb for coated paper (cross fold only).

Rough paper may be thin and flimsy, and therefore inappropriate for cross fold.

Note

- **Paper Σ dent and folding misalignment in both directions may increase or paper may be fed unstably depending on the following conditions. However, it is not a malfunction.**
  - **The folded line of single-folded paper is not folded properly.**
  - **Folding environment (temperature and humidity)**
  - **Paper thickness, paper size, paper type, or paper grain direction, etc.**

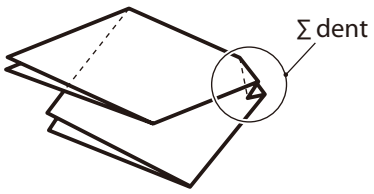

- **Double-feed detection does not operate when cross fold is performed. Select the setting [OFF].**

4-1. Cross fold of standard paper

⚠CAUTION

Do not put fingers inside during operation.
Keep away long hair, ties, jewelry and loose clothing.
It could cause injury.

The following describes the cross fold of standard paper, using cross single folding shown in the figure as an example.

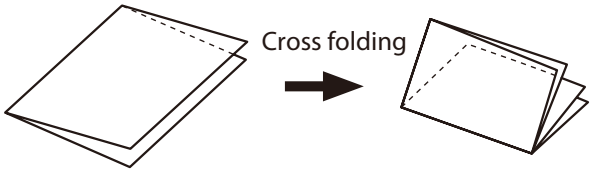

1 **Single fold standard paper according to the procedure of Chapter 2 "3. Standard Folding of Standard Paper" (p.2-5).**

2 **Press the folded edge of single folded paper with the fingertip.**

The paper feeding state will be unstable or paper Σ dent may be caused if the folded edge of folded paper is not folded firmly.

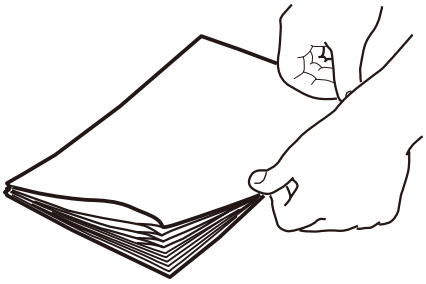

3 **Loosen the guide fixing screw.**

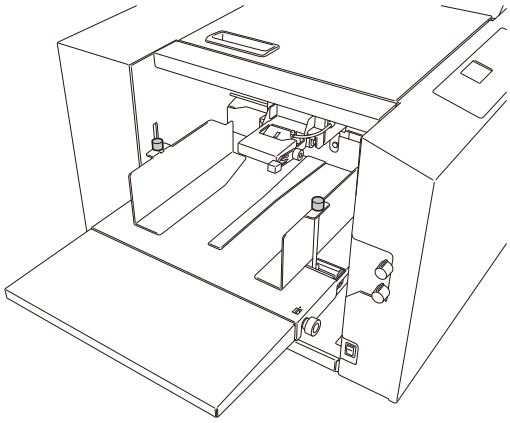

4 **Stack the single-folded paper on the paper feed tray with the folded edge toward the non-operator's side.**

The stacking amount is equivalent to about half (25 mm/ 0.98 inch) of the height of the paper feed guide on the folding side.

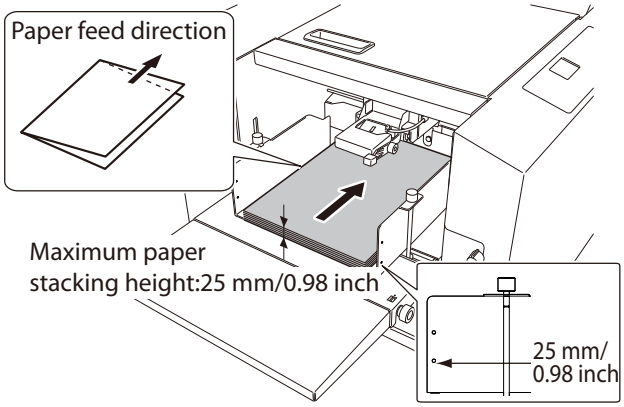

Note **A feeding error may occur if the stacking height of single-folded paper is largely different on both sides even though the stacking height of single-folded paper is 25 mm/0.98 inch or less. If so, decrease the number of sheets stacked on the paper feed tray to reduce the difference on both sides of paper.**

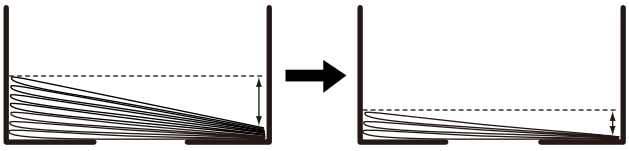

5 **Attach the paper feed guide lightly to the side of the paper and tighten the fixing screws.**

6 **Set the trail edge guide unit to the rear end of paper.**

The trail edge guide unit must be set slightly apart from the paper.

7 **Set the air volume of [Sep. Air] or [Pickup Air].**

Set the air volume referring to "Air Adjustment Table" (p.2-7) to the set numerical value + [5].

8 **Set the separating air adjustment knob to [2].**

9 **Set the separator adjustment knob to [3].**

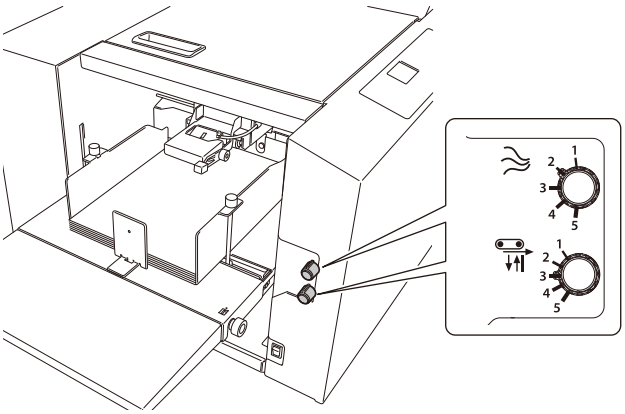

10 **Set the stack height sensor adjustment knob to the scale between the first one and second one.**

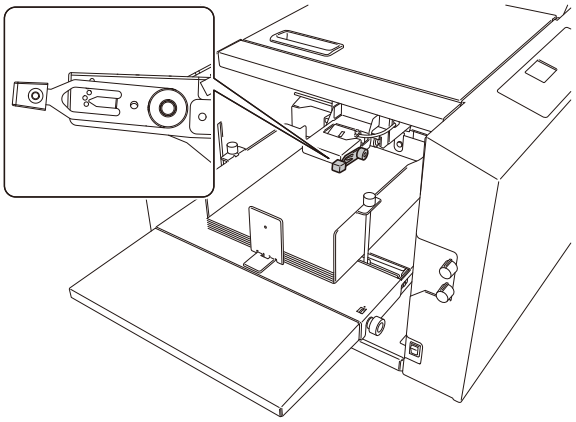

11 **Press the ◀ or ▶ key to set the processing speed to [4].**

Set the processing speed for cross fold to [4] or less. Paper jam may occur depending on the paper size when performing cross fold with the processing speed at [4] or more.

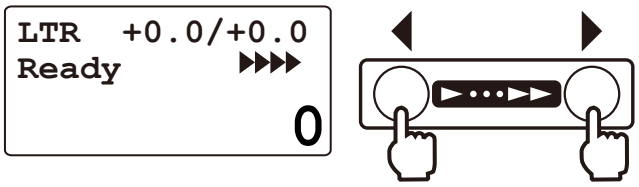

12 **Check that [D-Feed Detect] is set to [OFF].** (p.3-20)

13 **Check that [Feed Interval] is set to [Normal].** (p.3-22)

Set [Feed Interval] to [Slow] when mis-feed occurs during folding operation of thick paper. (p.3-22)

14 **Set to single folding using the folding mode key.**

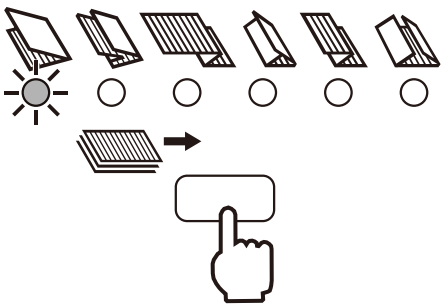

15 **Press the test key to test fold.**

16 **Check the finish.**

4-2. Cross fold of non-standard paper

1 **Single fold non-standard paper according to the procedure of Chapter 2 "3. Standard Folding of Standard Paper" (p.2-5).**

2 **Press the menu key to display [Paper Size Set].**

3 **Press the ↵ key.**
At this stage [Auto] or [Man] can be changed.

```
Paper Size Set
 Set          Auto
 P Length   457.0
```

4 **Set to [Man] with the ◀ key or ▶ key.**

```
Paper Size Set
 Set          Man
 P Length   457.0
```

5 **Press the ↵ key.**

6 **Measure the length of single-folded paper.**

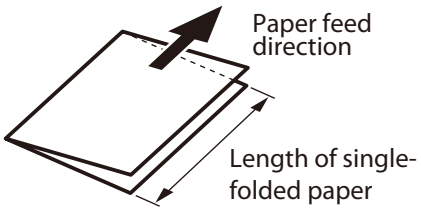

7 **Select [P Length] with the ▼ key or ▲ key.**

8 **Press the ↵ key.**
[P Length] can be changed at this stage.

9 **Input the measured numerical value on the keypad.**

10 **Press the ↵ key.**
The input value will be set.

11 **Follow procedures 2 to 15 of "4-1. Cross fold of standard paper" (p.3-13).**

4-3. Cross fold paper at the desired folding position

This is a method to cross-fold standard or non-standard paper at any desired positions. Standard paper or non-standard paper is handled in the same way and cross-folded by using a method to register the fold position as a custom fold.

1 **Register custom fold referring to the procedures of "3. Custom Folding" (p.3-8).**

2 **Single-fold the paper in the custom fold mode.**

3 **Register the single-folded paper again as a custom fold referring to the procedures of "3. Custom Folding" (p.3-8).**

4 **Follow steps 2 to 15 of "4-1. Cross fold of standard paper" (p.3-13).**

5. Changing the Stacker Roller Height

Some thick and stiff paper may not be output smoothly because the paper may open after folding.

Change the stacker roller height and widen the space for the paper to pass in the output area.

1 **Remove the auxiliary paper output guide.**

2 **Lift the stacker roller and hold it with hand to move to the [A] position shown in the figure.**

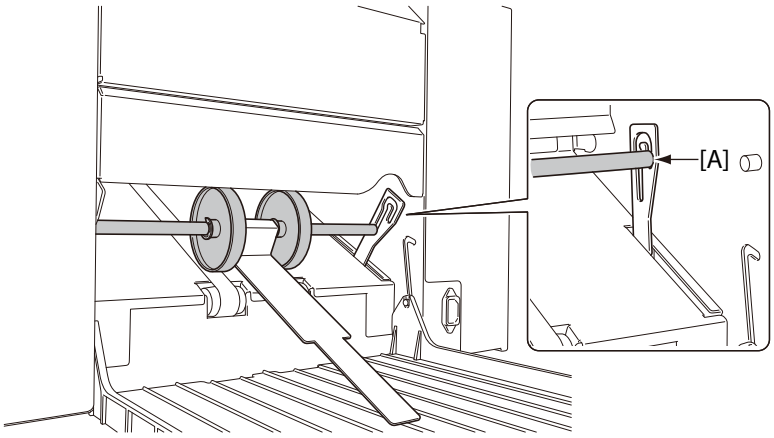

Note **After completing folding operations, be sure to return the stacker roller to the standard position. Leaving it in the raised state will result in poor alignment of ejected paper.**

6. Stacking the Folded Paper

The angle of the paper receiving tray of this machine can be changed. If the angle is changed, the folded paper can be stacked in the following two ways according to the purpose.

Diagonal stacking: Basic paper stacking method

Straight stacking: Used when the folded paper in folding modes such as gate fold with thick paper (81.4 g/m^2/22 lb or more) is retained at the ejection section.

Diagonal stacking

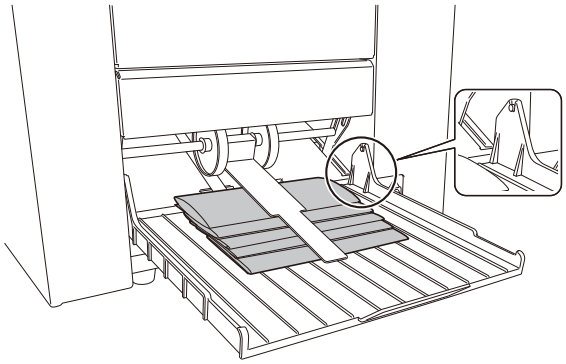

Straight stacking

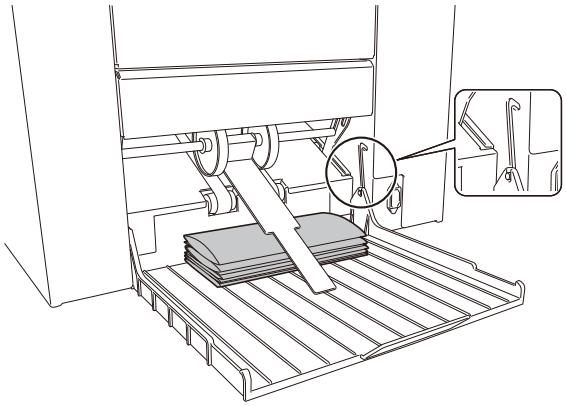

7. Function Setting

Function setting can be performed for shortening the operation procedure or adjustment according to the paper used based on the purpose of the user.

7-1. Thin paper mode

Use the thin paper mode when abnormal folding or paper creasing occurs by handling thin and flimsy paper such as rough paper, recycled paper, etc. Always use this mode for thin paper. Paper jam may occur if this mode is used for other than thin paper.

1 **Press ◀ key on the top screen, and set the processing speed to [1].**

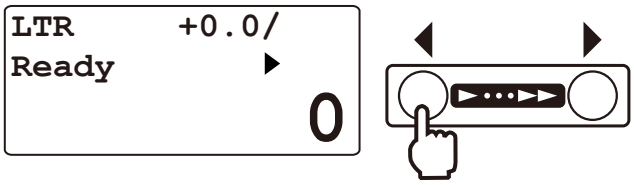

2 **Press the ◀ key.**

The processing speed display reverses, and the thin paper mode has been set.

Press the ▶ key to clear the thin paper mode.

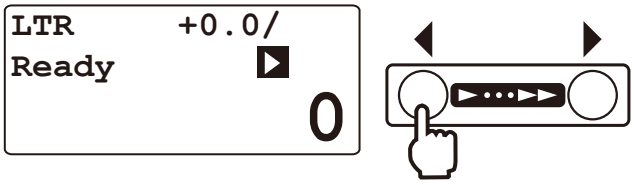

7-2. Interval (batch counting) function

Interval (batch) function specifies the number of sheets to be folded and suspend folded paper by interrupting paper folding operation for a certain period of time.

Take out ejected paper during interruption, and another operation after paper folding such as distribution or enclosure can be prepared.

As an example, set to paper folding pause by 50 sheets and for 10 seconds.

1 **Press the menu key to display [Interval Setting].**

```
Interval Setting
 Set          OFF
 No of Sec      5
 No of Sht      1
```

2 **Select [Set] with the ▲ or ▼ key.**

3 **Press the ↵ key.**

At this stage [ON] or [OFF] can be changed.

4 **Select [ON] with the ◀ or ▶ key.**

5 **Press the ↵ key.**

The setting item is set.

```
Interval Setting
 Set           ON
 No of Sec      5
 No of Sht      1
```

6 **Select [No of Sec] with the ▲ or ▼ key.**

```
Interval Setting
 Set           ON
 No of Sec      5
 No of Sht      1
```

7 **Press the ↵ key.**

The numerical value can be changed at this stage.

8 **Select [10] with the ◀ or ▶ key.**

Selected numerical value : [3][5][10]

```
Interval Setting
 Set           ON
 No of Sec     10
 No of Sht      1
```

9 **Press the ↵ key.**

A numerical value is set.

10 **Select [No of Sht] with the ▲ or ▼ key.**

```
Interval Setting
 Set           ON
 No of Sec     10
 No of Sht      1
```

11 **Press the ↵ key.**

At this stage the numerical value can be changed.

12 **Input [50] on the keypad.**

Setting range : 1 to 999 sheet

```
Interval Setting
 Set           ON
 No of Sec     10
 No of Sht     50
```

13 **Press the ↵ key.**

A numerical value is set.

14 **Press the ⇨ key.**

The display returns to the top screen, an icon will be displayed on the LCD display.

Memo [Interval Setting] will be cleared by turning off the power.

```
A4        +0.0/
Ready      ▶▶▶▶▶
⏲
                0
```

7-3. Double-feed detection setting

Double-feed detection reads the thickness of paper on test folding and detects when more than one sheet of paper is fed into the machine at a time.

Set the paper thickness to [Thin], when normal operation is performed with [D-Feed Detect] set to [ON]. Set the paper thickness to [Thick] when double-feed is detected mistakenly even though paper is not double-fed during test folding or normal operation with the paper thickness set to [Thin].

1 **Press the menu key to display [D-Feed Detect].**

2 **Select [Set] with the ▲ or ▼ key.**

3 **Press the ↵ key.**

At this stage [ON] or [OFF] can be changed.

4 **Select [ON] with the ◀ or ▶ key.**

```
D-Feed Detect
 Set          OFF
 Thickness    Thin
```

5 **Press the ↵ key.**

The setting item is set.

```
D-Feed Detect
 Set           ON
 Thickness    Thin
```

6 **Select [Thickness] with the ▲ or ▼ key.**

7 **Press the ↵ key.**

At this stage [Thin] or [Thick] can be changed.

8 **Select [Thin] or [Thick] with the ◀ or ▶ key.**

```
D-Feed Detect
 Set           ON
 Thickness    Thin
```

9 **Press the ↵ key.**

The selected item is set.

```
D-Feed Detect
 Set           ON
 Thickness   Thick
```

10 **Press the ⇨ key.**

The display returns to the top screen, an icon will be displayed on the LCD display.

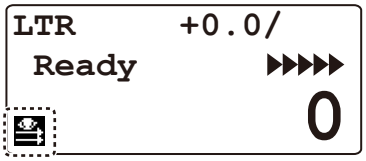

- Be sure to test fold before starting paper folding when the double-feed detection setting is set to [ON]. The machine will not start if test folding is not performed even when the start key is pressed. The icon shown in the figure on the right will be displayed if test folding is performed.

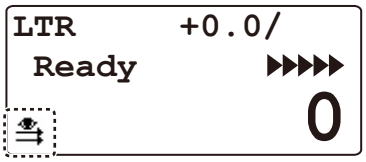

- Double-feed will not be detected when using the paper with the length of 250 mm/9.84 inches or less, even if the double-feed detection setting is set to [ON]. The icon will be changed as shown in the figure when using the paper with the length of 250 mm/9.84 inches or less.

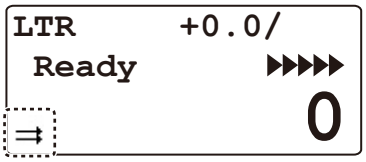

- The data on paper thickness read by test folding will be cleared by changing the [Thickness] in the double-feed detection setting. Test fold again when the setting is changed.

Note

- **Be sure to perform test folding every time printing materials are changed to different ones even if the quality and thickness of paper used are the same. Double-feed may not be detected correctly if processing is started without test folding.**
- **Double-feed detection may not work properly if printing on paper is uneven or paper is misaligned.**
- **Repeat test folding if double-feed occurs on test folding after double-feed detection is set to [ON]. Double-feed will not be detected correctly if paper is processed with the same settings as when double-feed is detected on test folding.**

When mis-detection occurs

Double-feed or mis-feed may sometimes be detected although the paper is fed normally.

- If false double-feed detection occurs when paper thickness is set to [Thin], repeat test folding after setting paper thickness to [Thick]. If false detection continues to occur after selecting [Thick], double-feed cannot be detected. Set the double-feed detection to [OFF]
- If false mis-feeding detection occurs when paper thickness is set to [Thick], repeat test folding afyer setting paper thickness to [Thin]. If false detection continues to occur after selecting [Thin], double-feed cannot be detected. Set the double-feed detection to [OFF].

7-4. Paper feed interval time setting

By changing feed interval the time lag that exits after one sheet is fed and until the next is fed can be changed. Set the feed interval to [Slow] if [Feed Err Misfeed] occurs with thick, heavy paper even after air volume, etc. has been adjusted.

Setting the feed interval to [Fast] will raise processing performance, but feed error may be more likely to occur with large sheets of paper such as B4, A3, etc.

1 **Press the menu key to display [Other Setting].**

```
Other Setting1/5
 Feed Interval
 Stack Roll Adj
 Belt Convey Vol
```

2 **Select [Feed Interval] with the ▲ or ▼ key.**

3 **Press the ↵ key.**

The [Feed Interval] screen is displayed.

```
Feed Interval
      Normal
```

4 **Press the ↵ key.**

At this stage the feed interval can be changed to [Normal], [Fast], or [Slow].

5 **Use the ◀ or ▶ key to select the mode.**

6 **Press the ↵ key.**

The selected item is set.

```
Feed Interval
      Fast
```

7 **Press the ⇨ key.**

Returns to [Other Setting].

8 **Press the ⇨ key.**

Returns to the top screen.

7-5. Stacker roller adjustment

The position of the stacker roller is set automatically to match the paper size and folding mode. The position can be changed if thick paper, or paper processed in cross fold tends to unfold, stack unevenly, or jam on ejection.

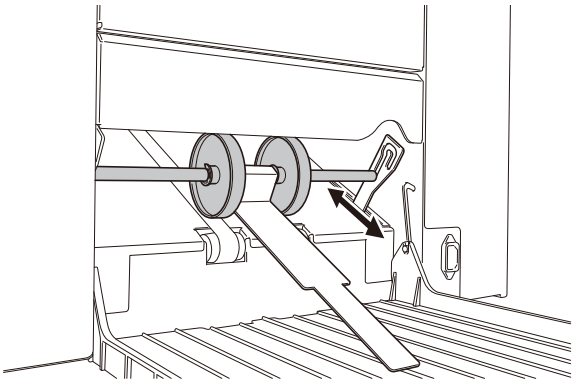

Guide for setting the position of stacker roller

For EU

Settings	Applicable standard paper size and folding mode	
1	B5	Double fold
	A5	Double fold, Letter fold, Accordion-fold
	B6	Double fold, Letter fold, Accordion-fold
3	A4	Double fold
	B5	Accordion-fold
5	A3, B4	Double fold
	A4	Letter fold, Accordion-fold
	B5	Letter fold
	A5, B6	Single fold, Irregular accordion fold-out
9	B4	Letter fold, Accordion-fold
	B5	Single fold, Irregular accordion fold-out
10	A5	Gate fold
	B5	
	B6	
11	A3	Letter fold, Accordion-fold
	A4	Single fold, Irregular accordion fold-out
12	A4	Gate fold
15	A3, B4	Single fold, Irregular accordion fold-out, Gate fold

For North America

Settings	Applicable standard paper size and folding mode	
1	STMT, INV	Double fold, Letter fold, Accordion-fold
3	LTR	Double fold
5	STMT, INV	Single fold, Irregular accordion fold-out
	LTR	Letter fold, Accordion-fold
	LGL, LGR	Double fold
9	LGL	Letter fold, Accordion-fold
10	STMT, INV	Gate fold
12	LTR	Gate fold
11	LTR	Single fold, Irregular accordion fold-out
	LGR	Letter fold, Accordion-fold
15	LGL, LGR	Single fold, Irregular accordion fold-out, Gate fold

When sheets of paper processed the gate fold mode unfold and a sheet processed later slips into the one processed before:

Depending on the type and size of paper, the adjustable range in the gate fold mode is limited. Be sure to decrease the setting values one scale at a time in this mode and check the results.

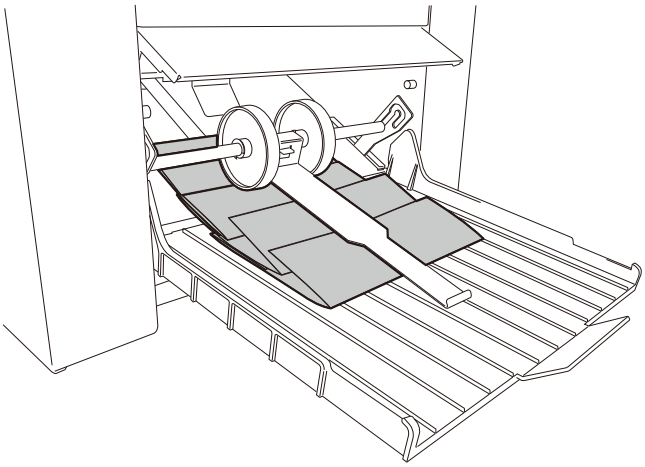

1 **Press the menu key to display [Other Setting].**

2 **Select [Stack Roll Adj] with the ▲ or ▼ key.**

```
Other Setting1/5
 Feed Interval
 Stack Roll Adj
 Belt Convey Vol
```

3 **Press the ↵ key.**

The [Stack Roll Adj] screen is displayed.

```
Stack Roll Adj
              15
```

4 **Press the ↵ key.**

At this stage the numerical value can be changed.

5 **Select a numerical value on the keypad or with the ◀▶ key.**

Selected range : [1] to[16]

As the numerical value decreases, the stacker roller position moves to the inner side of the machine, and as the numerical value increases, the stacker roller position moves to the outer side of the machine.

6 **Press the ↵ key.**

The changed numerical value is set and the stacker roller moves.

```
Stack Roll Adj
              10
```

7 **Press the ⇄ key.**

Returns to [Other Setting].

8 **Press the ⇄ key.**

Returns to the top screen.

When the paper size or folding mode is changed, the former value is cleared.

When the paper size is changed according to the automatic detection of paper size, the value will not be cleared.

7-6. Setting ejection conveyance amount

Set the output tray amount to [Large] if double folded thick paper tends to unfold on output, stack unevenly, or jam at the paper output section.

1 **Press the menu key to display [Other Setting].**

```
Other Setting1/5
 Feed Interval
 Stack Roll Adj
 Belt Convey Vol
```

2 **Select [Belt Convey Vol] with the ▲ or ▼ key.**

3 **Press the ↵ key.**

The [Belt Convey Vol] screen is displayed.

```
Belt Convey Vol
          Normal
```

4 **Press the ↵ key.**

At this stage the output amount can be changed to [Normal] or [Large].

5 **[Large] Use the ◀ or ▶ key to select [Large].**

6 **Press the ↵ key.**

The selected item is set.

```
Belt Convey Vol
       Large
```

7 **Press the ⇨ key.**

Returns to [Other Setting].

8 **Press the ⇨ key.**

Returns to the top screen.

Memo [Belt Convey Vol] is not reset until the power is turned off. However, it returns to [Normal] only when the folding mode is changed from custom folding to standard folding.

[Belt Convey Vol] returns to [Normal] by turning off the power with [Oper Mode] set to [Normal]. However, it will start up with the setting contents changed in the [Last Fold] or [Stopper Fixed] even if the power is turned off.

7-7. Operation mode settings

The operation mode setting is used to set the fold stopper function of the folding plates 1 and 2 when the power is turned on.

The following modes can be set.

Normal mode

[Normal] : When the power is turned on, use the normal mode to start up in the normal setting state.

Refold mode

[Last Fold] : When the power is turned on, this machine starts up in the setting state used last. However the machine starts up with [Interval Setting] set to [OFF] and [Detect OFF] to [ON]. The adjustment values of the folding plates 1 and 2 return to default values if they are not registered.

Folding stopper fixed mode

[Stopper Fixed] : Use [Stopper Fixed] to delete the setting operation on the control panel when folding paper always in the same conditions. In this mode, when the power is turned on, this machine is always set to the same conditions automatically, and initial operation of the folding plates will not be performed. As the [Stopper Fixed] is automatically set to the same conditions, the folding mode and paper size cannot be changed. However the machine starts up with [Interval Setting] set to [OFF] and [Detect OFF] to [ON]. The adjustment values of the folding plates 1 and 2 return to default values if they are not registered.

1 **Press the menu key to display [Other Setting].**

```
Other Setting1/5
 Feed Interval
 Stack Roll Adj
 Belt Convey Vol
```

2 **Select [Oper Mode] with the ▲ or ▼ key.**

```
Other Setting2/5
 Oper Mode
 Test Feed Set
 Power Save Set
```

3 **Press the ↵ key.**

The [Oper Mode] screen is displayed.

```
Oper Mode
          Normal
```

4 **Press the ↵ key.**

At this stage the mode can be changed to [Normal], [Last Fold], or [Stopper Fixed]

5 **Select a mode with the ◀ or ▶ key.**

6 **Press the ↵ key.**

The selected details are set.

```
Oper Mode
      Last Fold
```

7 **Press the ⇨ key.**

Returns to [Other Setting].

8 **Press the ⊟ key.**

Returns to the top screen.

When [Last Fold] or [Stopper Fixed] is set, an icon will be displayed on the LCD display.

```
LTR    +0.0/
Ready          ▶▶▶▶▶
                    0
```

[Last Fold]

```
297   148.5/
Ready          ▶▶▶▶▶
                    0
```

[Stopper Fixed]

Note **When the [Stopper Fixed] is set, folding misalignment in the vertical direction occurs by removing the folding plate with the power turned off. Be sure to press the cancel key and clear key at the same time when turning on the power so that the forcible ejection will be performed.**

7-8. Test feed setting

The number of sheets that are fed for test feeding can be changed.

1 **Press the menu key to display [Other Setting].**

```
Other Setting1/5
 Feed Interval
 Stack Roll Adj
 Belt Convey Vol
```

2 **Select [Test Feed Set] with the ▲ or ▼ key.**

```
Other Setting2/5
 Oper Mode
 Test Feed Set
 Power Save Set
```

3 **Press the ↵ key.**

The [Test Feed Set] screen is displayed.

```
Test Feed Set
 No of Sht      2
```

4 **Press the ↵ key.**

At this stage the numerical value can be changed.

5 **Select the number of sheets with the ◀ or ▶ key.**

Selected range : 1 to 3 sheets

```
Test Feed Set
 No of Sht      3
```

6 **Press the ↵ key.**

The selected numerical value is set.

7 **Press the ⊟ key.**

Returns to [Other Setting].

8 **Press the ⊟ key.**

Returns to the top screen.

7-9. Power saving setting

If the machine is not used for a certain period of time, the backlight of the LCD display will automatically go off by setting to Backlight Automatic Off mode.

1 **Press the menu key to display [Other Setting].**

```
Other Setting1/5
 Feed Interval
 Stack Roll Adj
 Belt Convey Vol
```

2 **Select [Power Save Set] with the ▲ or ▼ key.**

```
Other Setting2/5
 Oper Mode
 Test Feed Set
 Power Save Set
```

3 **Press the ↵ key.**
The [Power Save Set] screen is displayed.

```
Power Save Set
 Set          ON
 Time      60Sec
```

4 **Select [Set] with the ▲ or ▼ key.**

5 **Press the ↵ key.**
At this stage [ON] or [OFF] can be changed.

6 **Select [ON] or [OFF] with the ◀ or ▶ key.**

7 **Press the ↵ key.**
The selected item is set.

8 **Select [Time] with the ▲ or ▼ key.**

```
Power Save Set
 Set          ON
 Time      30Sec
```

9 **Press the ↵ key.**
At this stage the numerical value can be changed.

10 **Input numerical values on the keypad or with the ◀ or ▶ key.**
The numerical values can be changed by [5] using the ◀ or ▶ key.
Selected range : 15 to 60 second

11 **Press the ↵ key.**
The selected numerical value is set.

```
Power Save Set
 Set          ON
 Time      60Sec
```

12 **Press the ⇄ key.**
Returns to [Other Setting].

13 **Press the ⇄ key.**
Returns to the top screen.

7-10. Alarm setting

When this machine remains unused for the specified period of time, the buzzer sounds to remind that the power remains turned on.

When the [Alarm setting] is set to [ON], the buzzer sounds "pii" at the specified time. After this stage, when the machine remains unused, the buzzer sounds "pii" every one minute.

1 **Press the menu key to display [Other Setting].**

```
Other Setting1/5
 Feed Interval
 Stack Roll Adj
 Belt Convey Vol
```

2 **Select [Alarm Setting] with the ▲ or ▼ key.**

```
Other Setting3/5
 Alarm Setting
 Detect OFF
 Default Setting
```

3 **Press the ↵ key.**

The [Alarm Setting] screen is displayed.

```
Alarm Setting
 Set          OFF
 Time         5Min
```

4 **Select [Set] with the ▲ or ▼ key.**

At this stage [ON] or [OFF] can be changed.

5 **Select [ON] with the ◀ or ▶ key.**

6 **Press the ↵ key.**

The selected item is set.

7 **Select [Time] with the ▲ or ▼ key.**

```
Alarm Setting
 Set          OFF
 Time         5Min
```

8 **Press the ↵ key.**

At this stage the numerical value can be changed.

9 **Input numerical values on the keypad or with the ◀ or ▶ key.**

The numerical values can be changed by [5] using the ◀ or ▶ key.

Setting range : 5 to 120 min

10 **Press the ↵ key.**

The input value will be set.

```
Alarm Setting
 Set          ON
 Time         10Min
```

11 **Press the ▭ key.**

Returns to [Other Setting].

12 **Press the ▭ key.**

Returns to the top screen.

7-11. Detection OFF setting

When [No Paper] is displayed although paper is stacked on the paper feed tray, set paper detection to [OFF]. This setting will return to [ON] when the power is turned off.

Contact Formax dealer if detection error remains displayed even if the sensor is cleaned.

1 **Press the menu key to display [Other Setting].**

```
Other Setting1/5
 Feed Interval
 Stack Roll Adj
 Belt Convey Vol
```

2 **Select [Detect OFF] with the ▲ or ▼ key.**

```
Other Setting3/5
 Alarm Setting
 Detect OFF
 Default Setting
```

3 **Press the ↵ key.**
The [Detect OFF] screen is displayed.

```
Detect OFF
 Load          ON
```

4 **Press the ↵ key.**
At this stage [ON] or [OFF] can be changed.

5 **Select [OFF] with the ◀ or ▶ key.**

```
Detect OFF
 Load          OFF
```

6 **Press the ↵ key.**
The selected item is set.

7 **Press the ⇄ key.**
Returns to [Other Setting].

8 **Press the ⇄ key.**
Returns to the top screen.

7-12. Default setting

The setting contents such as speed or double-feed detection can be changed when [Normal] is set in the [Oper Mode] setting.

1 **Press the menu key to display [Other Setting].**

```
Other Setting1/5
 Feed Interval
 Stack Roll Adj
 Belt Convey Vol
```

2 **Select [Default Setting] with the ▲ or ▼ key.**

```
Other Setting3/5
 Alarm Setting
 Detect OFF
 Default Setting
```

3 **Press the ↵ key.**

The [Default Setting] screen is displayed.

```
Default setting
 Speed          5
 D-Feed       OFF
```

4 **Select [Speed] with the ▲ key or ▼ key.**

5 **Press the ↵ key.**

At this stage the numerical value can be changed.

6 **Input numerical values on the keypad or with the ◀ or ▶ key.**

Setting range : 0 to 6

```
Default setting
 Speed          3
 D-Feed       OFF
```

7 **Press the ↵ key.**

The selected value is set.

```
Default setting
 Speed          3
 D-Feed       OFF
```

8 **Select [D-Feed] with the ▲ key or ▼ key.**

9 **Press the ↵ key.**

At this stage [D-Feed] can be changed to [ON] or [OFF].

10 **Select [ON] or [OFF] with the ◀ key or ▶ key.**

11 **Press the ↵ key.**

The selected item is set.

```
Default setting
 Speed          3
 D-Feed        ON
```

12 **Press the ⇨ key.**
Returns to [Other Setting].

13 **Press the ⇨ key.**
Returns to the top screen.

7-13. Idling setting

Selecting [ON] on idling setting allows the machine to stand by idling when double-feed or mis-feed occurs, or when paper processing operation is stopped by pressing the start key. Folding operation can be resumed immediately by pressing the start key again as the machine's functions other than the conveyance drive have not been shut down completely.

1 **Press the menu key to display [Other Setting].**

```
Other Setting1/5
 Feed Interval
 Stack Roll Adj
 Belt Convey Vol
```

2 **Select [Idling] with the ▲ or ▼ key.**

```
Other Setting4/5
 Idling
 Tone
 mm/inch Setting
```

3 **Press the ↵ key.**
The [Idling] screen is displayed.

```
Idling
                OFF
```

4 **Press the ↵ key.**
At this stage [ON] or [OFF] can be changed.

5 **Select [ON] or [OFF] with the ◀ or ▶ key.**

6 **Press the ↵ key.**
The selected item is set.

```
Idling
                 ON
```

7 **Press the ⇨ key.**
Returns to [Other Setting].

8 **Press the ⇨ key.**
Returns to the top screen.

Memo Idling operation will stop when the control panel is not operated more than 30 seconds in the idling state.
Double-feed may occur depending on paper type when the air volume is adjusted in the idling state and paper is fed again after operating for a long time in the idling state.
The air volume can be adjusted using a new key even in the idling state.

7-14. Tone setting

The buzzer setting (key operational sound on the control panel) can be set to ON or OFF.

The buzzer sounds when a problem has occurred, whether the buzzer setting is [OFF] or not.

1 **Press the menu key to display [Other Setting].**

```
Other Setting1/5
 Feed Interval
 Stack Roll Adj
 Belt Convey Vol
```

2 **Select [Tone] with the ▲ or ▼ key.**

```
Other Setting4/5
 Idling
 Tone
 mm/inch Setting
```

3 **Press the ↵ key.**

The [Tone] screen is displayed.

```
Tone
                ON
```

4 **Press the ↵ key.**

At this stage [ON] or [OFF] can be changed.

5 **Select [ON] or [OFF] with the ◀ or ▶ key.**

6 **Press the ↵ key.**

The selected item is set.

```
Tone
               OFF
```

7 **Press the ▭ key.**

Returns to [Other Setting].

8 **Press the ▭ key.**

Returns to the top screen.

7-15. mm/inch setting

According to the using environment, the unit used for inputting numerical values of paper size, folding dimensions (folding stopper adjusting value), and cross folding registration can be changed.

1 **Press the menu key to display [Other Setting].**

```
Other Setting1/5
 Feed Interval
 Stack Roll Adj
 Belt Convey Vol
```

2 **Select [mm/inch Setting] with the ▲ or ▼ key.**

```
Other Setting4/5
 Idling
 Tone
 mm/inch Setting
```

3 **Press the ↵ key.**

At this stage [mm][inch] setting can be changed.

```
mm/inch Setting
              mm
```

4 **Press the ↵ key.**

The [mm/inch Setting] window is displayed.

5 **Select [mm] or [inch] with the ◀ or ▶ key.**

6 **Press the ↵ key.**

The selected item is set.

```
mm/inch Setting
            inch
```

7 **Press the ⇨ key.**

Returns to [Other Setting].

8 **Press the ⇨ key.**

Returns to the top screen.

7-16. Paper feed tray descent distance setting

If a feeding error occurs, or the stop key is pressed, the paper feed tray will descend. The descent distance can be set. (If [No Paper] is detected, the tray will descend to the lower limit regardless of the setting.)

The following modes can be set. It is recommended to set the paper feed tray descent distance to [Large]. When the descent distance is decreased by selecting [Not Descend] or [Small], paper may be put on the paper detection sensor depending on paper thickness or paper stack height, double-feed may occur when paper is put on the sensor and re-fed. **(p.1-14)**

[Large]: descends to the lower limit.

[Normal]: descends about 30 mm/1.18 inches from the paper feed tray stop position.

[Small]: descends about 20 mm/0.79 inch from the paper feed tray stop position.

[Not Descend]: remains at the paper feed tray stop position.

1 **Press the menu key to display [Other Setting].**

```
Other Setting1/5
 Feed Interval
 Stack Roll Adj
 Belt Convey Vol
```

2 **Use the ▲ or ▼ key to select [Tray Desc Amt].**

```
Other Setting5/5
  Tray Desc Amt
```

3 **Press the ↵ key.**

The [Tray Desc Amt] screen is displayed.

```
 Tray Desc Amt
        Large
```

4 **Press the ↵ key.**

At this stage [Large], [Not Descend], [Small] or [Normal] can be selected.

5 **Use the ◀ or ▶ key to select the item.**

6 **Press the ↵ key.**

The selected item is set.

```
Tray Desc Amt
         Normal
```

7 **Press the ▭ key.**

Returns to [Other Setting].

8 **Press the ▭ key.**

Returns to the top screen.

Memo

Chapter 4 Cleaning the Unit

- **Be sure to disconnect the power cord from the wall outlet before cleaning the unit.**
- **Before you use the machine after cleaning, make sure that its surface is completely dry.**

⚠ CAUTION

Do not use flammable sprays and solvents during cleaning, etc. of internal parts of the machine and in the vicinity of the machine.

Doing so could cause build-up of gas inside the machine, which in turn could cause ignition, resulting in fire and explosion.

When using alcohol, exercise caution against fire and ventilate well, and after use, store in a safe place.

Use of other solvents may damage the rubber rollers and resin inside the machine, resulting in malfunction.

1. Cleaning the folding roller and conveyance roller

1 **Remove the folding plate 1.**

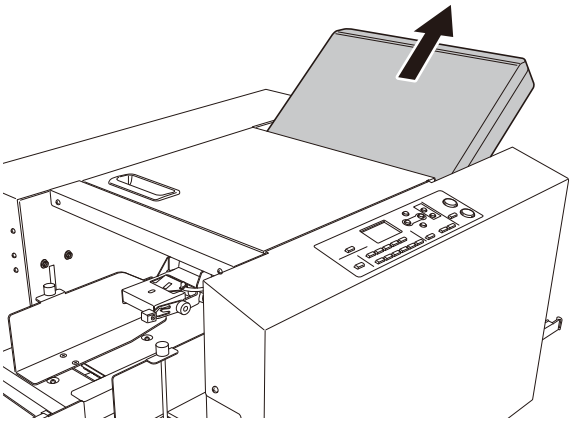

Attach the folding plate 1 holding with both hands.

2 **Open the top cover.**

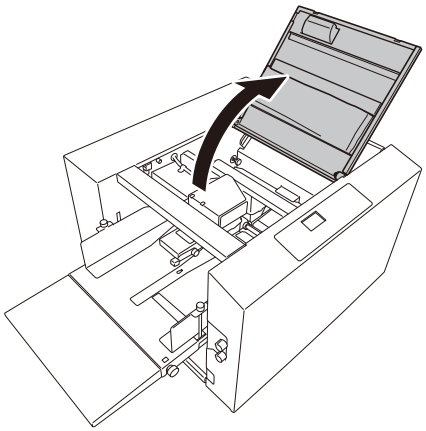

⚠ WARNING

Open or close the top cover gently.

Hands or fingers may be caught in the cover section. Doing so may result in injury.

3 **Wipe with a cloth moistened with alcohol, while rotating the jam correction knob on the folding roller by hand.**

4 **Wipe the conveyance roller with a cloth moistened with alcohol while rotating it by hand.**

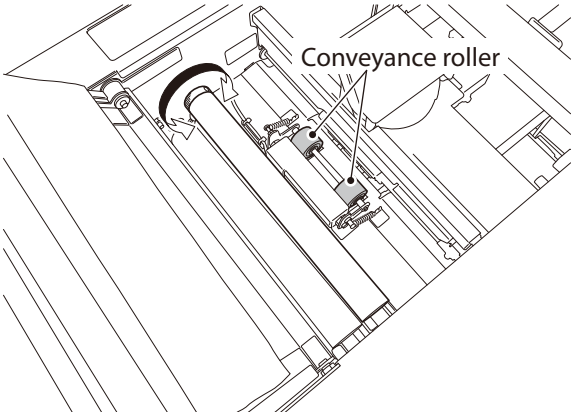

2. Cleaning the LCD

Wipe the LCD on the control panel with the dry cloth.

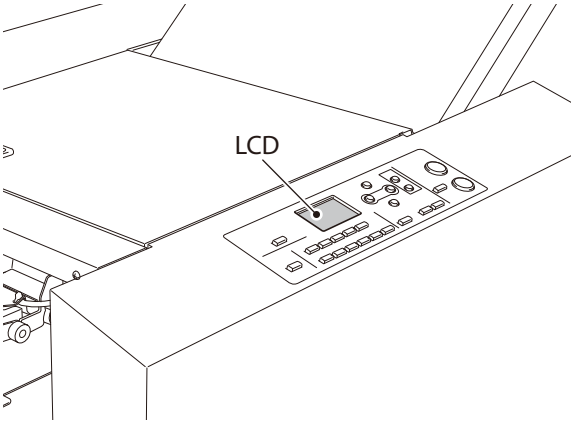

3. Cleaning the belt

Suction belt

Wipe the belt with a cloth moistened with alcohol while rotating it by hand.

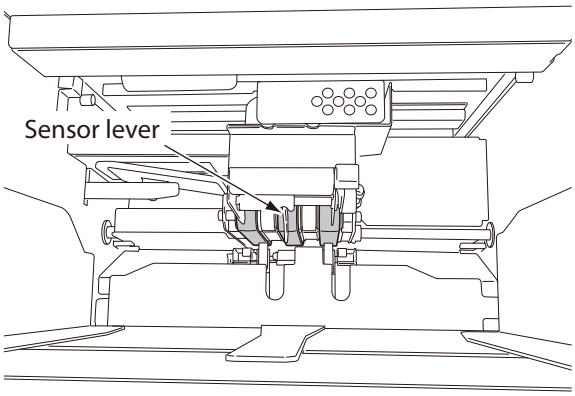

Note **Make sure that the cloth does not get caught on the sensor lever.**

Stacker belt

1 **Remove the auxiliary paper ejection guide.**

2 **Wipe the stacker belt with a cloth moistened with alcohol while rotating it by hand.**

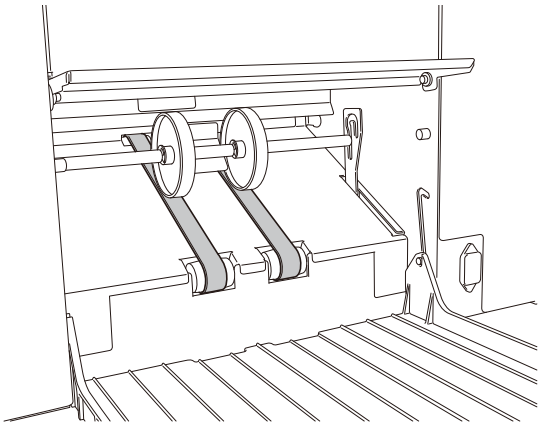

4. Cleaning the sensor

Sensor attachment position

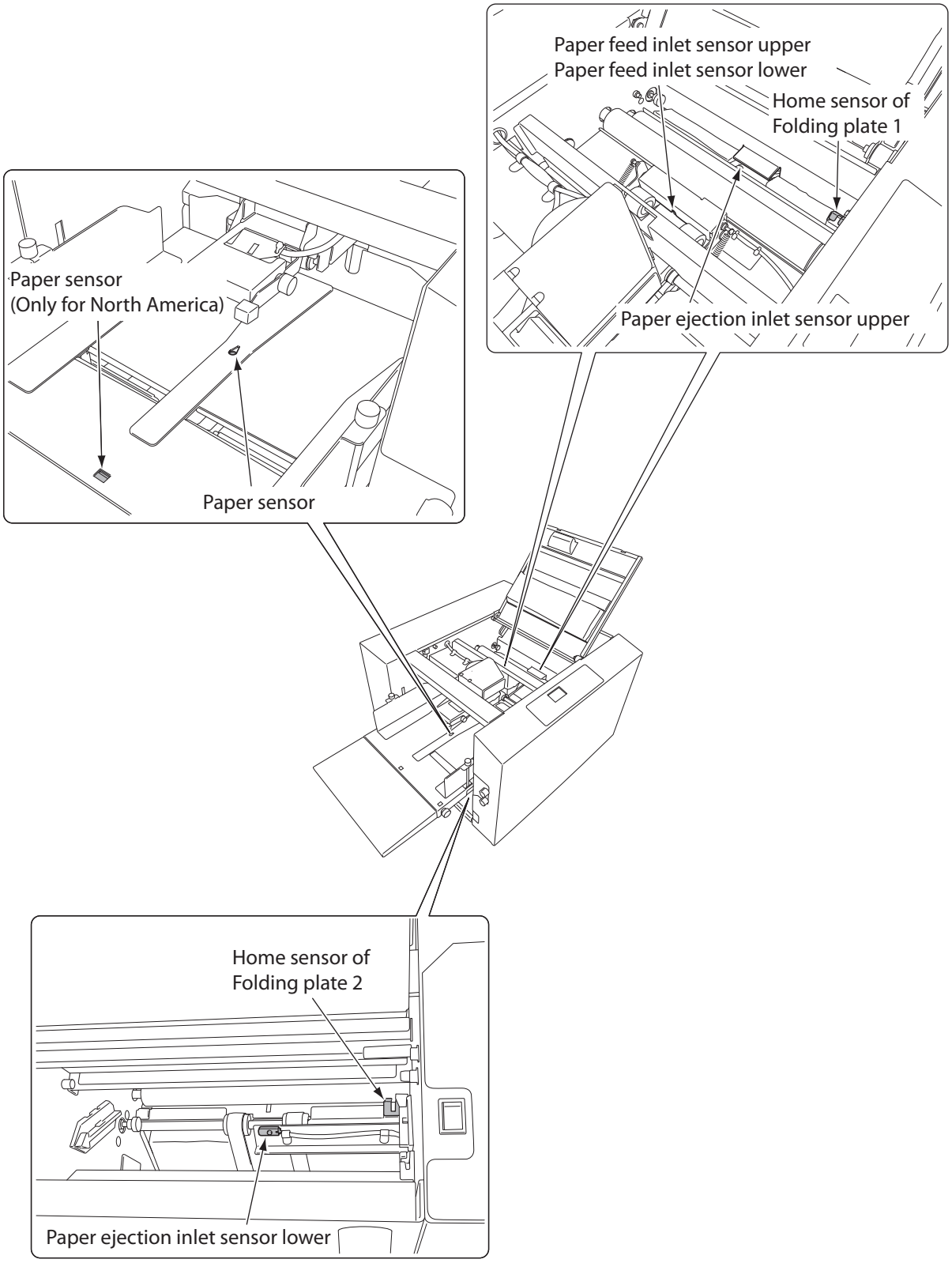

Remove dust on the infeed sensor, the paper ejection sensor (front) and the paper ejection sensor (back) by blowing air.

Keep in mind the following notes when using compressed air for cleaning.

Note
- **Use a non-flammable air duster. Read the cautions for use, and be sure to keep the descriptions in mind.**
- **The sensors and metallic section are cooled by gas in the air duster, and may be temporarily condensed. Wait for about five minutes.**

WARNING

Do not use flammable gas or solvent inside unit.

It could cause fire or combustion.

AVERTISSEMENT

Ne pas utiliser de gaz inflammable ni de solvant à l´intérieur de l´appareil.

Cela pourrait provoquer un feu ou une combustion.

Paper sensor

1 **Open the top cover.**

WARNING

Open or close the top cover gently.
Hands or fingers may be caught in the cover section. Doing so may result in injury.

2 **Insert the nozzle of air duster into the hole shown in the figure to blow air.**

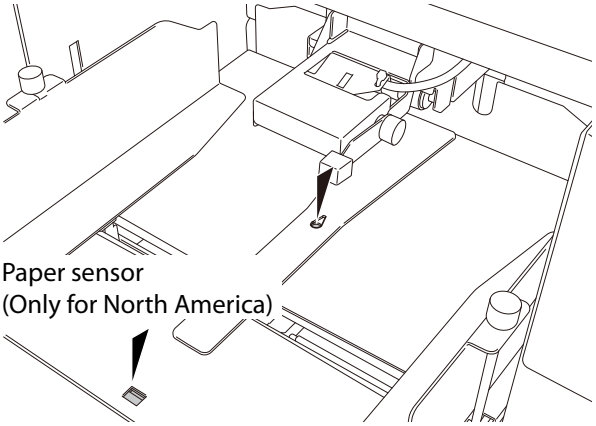

Paper ejection inlet sensor upper, Paper ejection inlet sensor (upper and lower), Home sensor of Folding plate 1

1 **Remove the folding plate 1.**

Note **Attach the folding plate 1 holding with both hands.**

2 **Open the top cover.**

WARNING

Open or close the top cover gently.
Hands or fingers may be caught in the cover section. Doing so may result in injury.

3 **Insert the nozzle of air duster into the hole shown in the figure to blow air.**

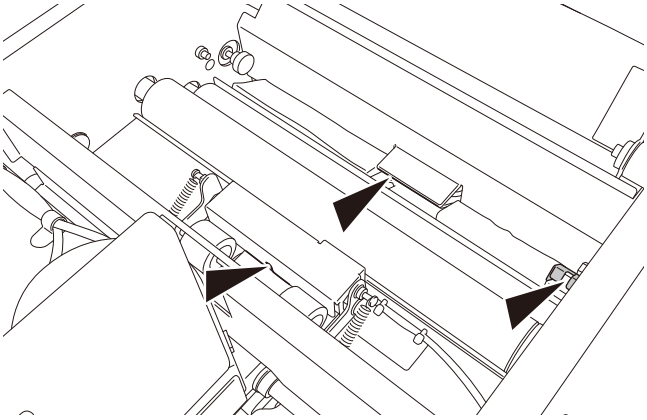

Paper ejection inlet sensor lower, Home sensor of Folding plate 2

1 **Remove the folding plate 2.**

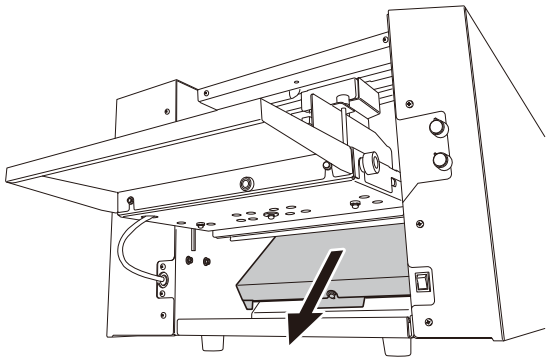

Note **Attach the folding plate 2 holding with both hands.**

2 **Blow air to each sensor with an air duster.**

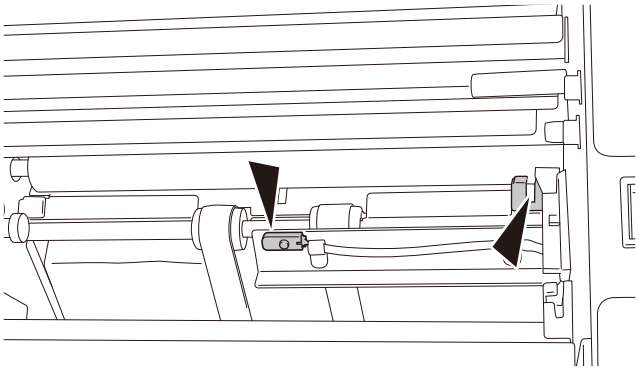

Chapter 5 Trouble Guide

1. Error Code

When an error occurs, error codes will be displayed on the LCD window as follows.

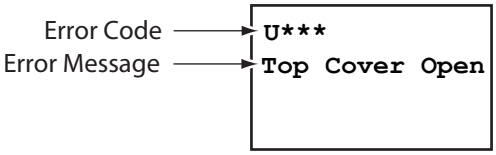

Check the error code or the error message and solve the problem by following the list below.
If the error persists or occurs frequently, contact your dealer.

1-1. Warning error

Error Code	Error Message	Cause	Solution
U010	Top Cover Open	The top cover is open.	Close the top cover.
U030	Fold Plate1 Err	Folding plate 1 is not attached.	Attach folding plate 1.
U040	Fold Plate2 Err	Folding plate 2 is not attached.	Attach folding plate 2.
U050	Suction Box Err	Foreign particle is caught between the paper feed tray and suction box.	Make sure that there is no foreign particle on the paper feed tray.
U060	Safety Lever Err	Foreign particle is caught between the paper feed tray and safety lever. The safety lever is being kept pressed down.	Make sure that there is no foreign particle under the paper feed tray.
U100	Check the paper feed tray.	Back and forth of paper stacked on the paper feed tray is not in alignment.	Align paper.
		[Sep. Air] is set to smaller value, compared to paper type.	Increase the setting value of [Sep. Air] by [5] scales at a time.
		The stack height sensor is positioned too low.	Increase the value of stack height sensor adjustment knob by one scale.

1-2. Motor error

Error Code	Error Message	Cause	Solution
E010	Convey Motor Err	Abnormal load on the motor due to paper jamming, etc.	Remove jammed paper and press the clear key to release the error.
E020			
E140	Tray Motor Err	Abnormal load on the motor for raising and lowering paper feed plates due to paper jamming, etc.	
E210	Fold1 Motor Err	Folding plate 1 is not attached properly.	Make sure that folding plate 1 is attached properly.
E220			
E230		Motor for moving the folding stopper is not functioning due to paper jamming, etc.	Remove jammed paper and press the clear key to release the error.
E310	Fold2 Motor Err	Folding plate 2 is not attached properly.	Make sure that folding plate 2 is attached properly.
E320			
E330		Motor for moving the folding stopper is not functioning due to paper jamming, etc.	Remove jammed paper and press the clear key to release the error.
E810	S-Motor Err	Abnormal load on the stacker roller motor due to paper jamming, etc.	Remove jammed paper and press the clear key to release the error.
E820			
E830			

1-3. Paper jam error

Error Code	Error Message	Cause	Solution
J100	Feed Err Misfeed	Miss-feed on the paper feed tray.	Align the paper again.
J110	Feed Err Double	Double-feed occurs at the paper feed section.	Remove the double-fed paper.
J120	Feed Sec Jam	Paper jamming at paper feed section.	Remove the jammed paper.
J130	Paper Size Error	The stacking direction of the paper on the paper feed tray is incorrect.	Stack paper in the correct direction.
		The length of the paper set is incorrect	Check the length of paper set.
J200	Inside Jam	Paper jamming inside the machine.	Remove the jammed paper. Clear the error by referring to forcible ejection **(p.5-9)** or opening and closing the top cover.
J800	Ejection Jam	Paper jamming at paper ejecting section.	Remove the jammed paper.

1-4. Errors requiring a service call

When the following error codes are displayed, turn the power off and on. If the error is not cleared, contact Formax dealer.

E130
E240
E340
E840
E910
E930
E940

2. Paper Jam

⚠ CAUTION

Do not put fingers inside during operation.
Keep away long hair, ties, jewelry and loose clothing.
It could cause injury.

When paper jams, remove the paper in the following way.

2-1. Paper feed section

Pull out jammed paper slowly.

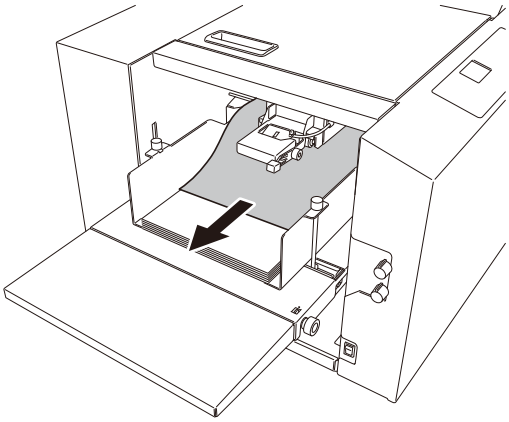

Memo If paper cannot be pulled out easily, first remove all the paper on the paper feed tray and pull out the jammed paper.

2-2. Folding plate

U fgjc fmjbgl e r f c a_ncel key, press the clear key.

Eject forcibly the paper inside the folding plate.

Forcible ejection in the folding plate will not stop until the folding stopper returns to the home position, as the folding stopper moves, even if the key is not held.

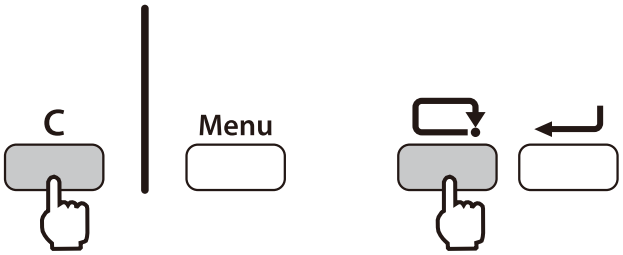

Even if the paper is not removed after forcible ejection, check the position of paper jam to remove the paper with the following method.

Folding plate 1

1 **Take out the folding plate 1.**

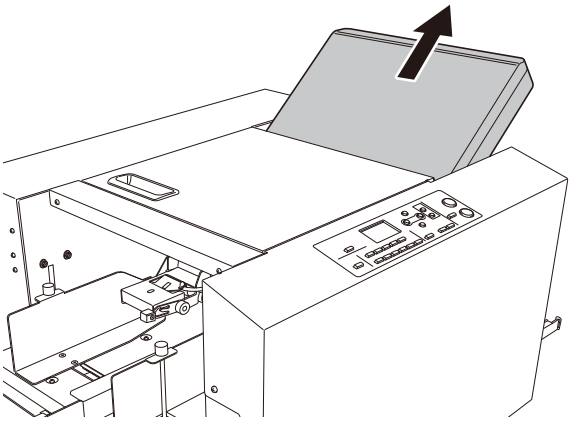

Note **Attach the folding plate 1 holding with both hands.**

2 **Open the top cover.**

⚠WARNING

Open or close the top cover gently.

Hands or fingers may be caught in the cover section. Doing so may result in injury.

3 **Pull out the paper rotating the jam correction knob.**

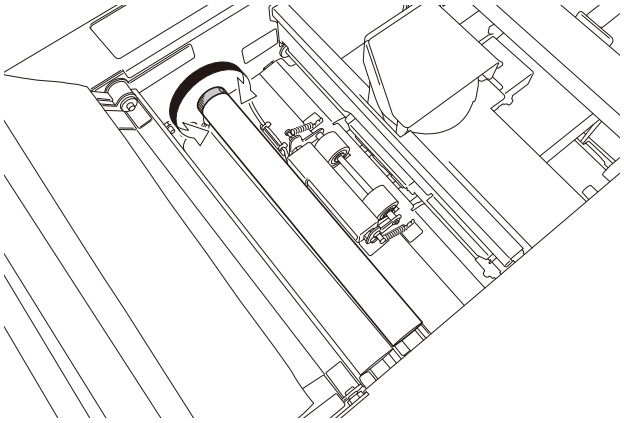

4 **Close the top cover.**

5 Attach the folding plate 1 along the set guides.

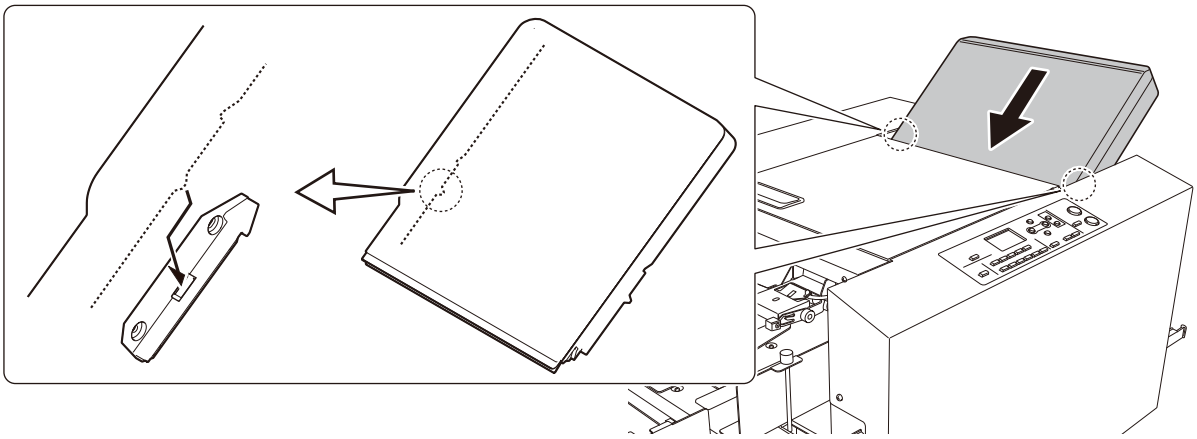

Attach the folding plate 1 holding with both hands.

Check that the gear on the reverse side of the folding plate 1 rotates in the front-back direction, if it is not easy to attach the folding plate 1.

Attach the folding plate 1 to this machine after rotating the gear by 360 degrees in a rotating direction, when it does not rotate either in the front direction or in the back direction.

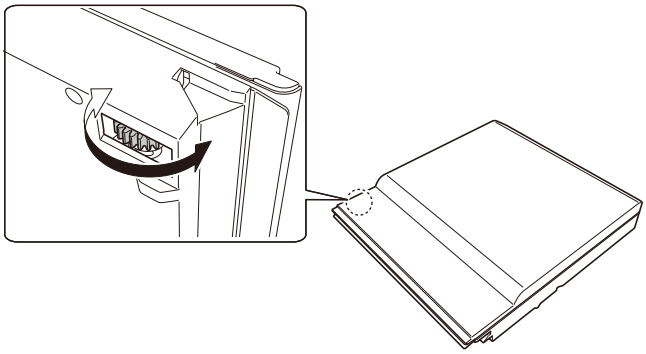

Folding plate 2

1 **Take out the folding plate 2.**

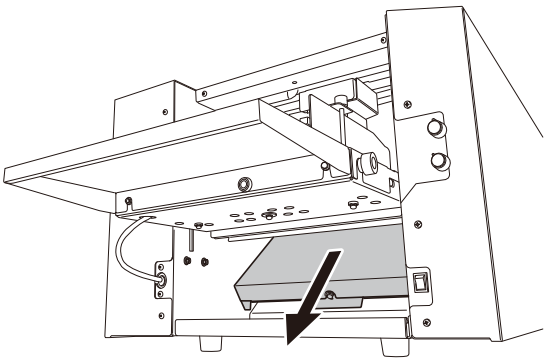

Note **Attach the folding plate 2 holding with both hands.**

2 **Open the top cover.**

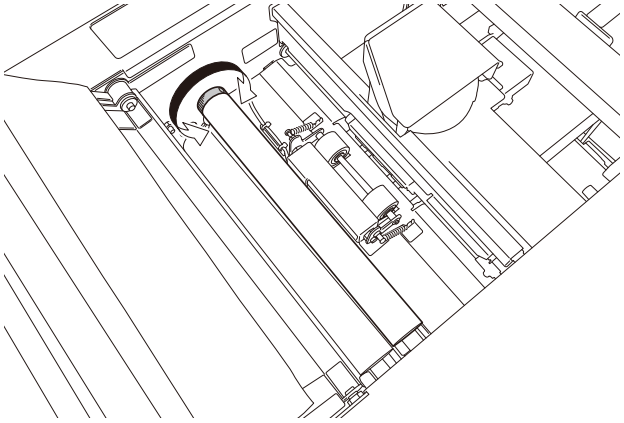

⚠WARNING

Open or close the top cover gently.
Hands or fingers may be caught in the cover section. Doing so may result in injury.

3 **Pull out the paper rotating the jam correction knob.**

4 **Close the top cover.**

5 **Insert the folding plate 2 along the set guides on the machine.**

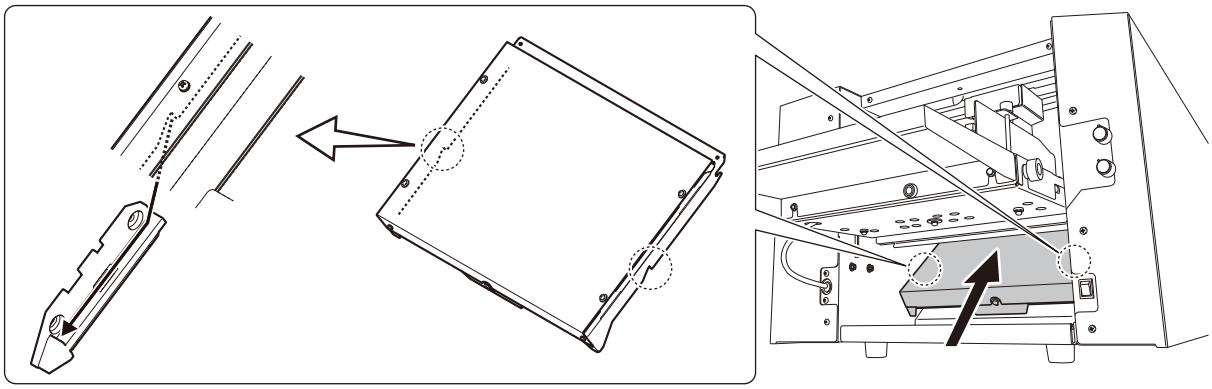

Note **Attach the folding plate 2 holding with both hands.**

Memo When having difficulty in inserting the folding plate 2, make sure that the stopper of the folding plate 2 does not protrude beyond the cover.

The folding plate cannot be inserted properly as it bumps into interior parts if the stopper protrudes beyond the cover. If this is the case, turn the gear in the direction of an arrow to move the stopper inside the cover.

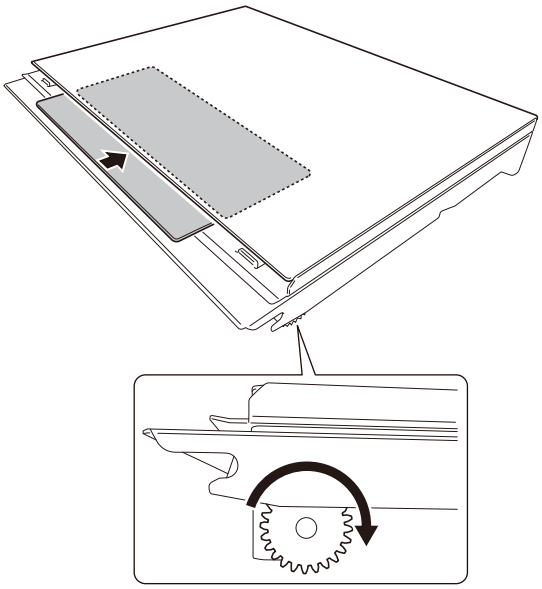

Note **Do not hold the belt section of the folding plate 2. Doing so will result in malfunction of the machine.**

2-3. Folding roller

1 **Take out the folding plate 1.**

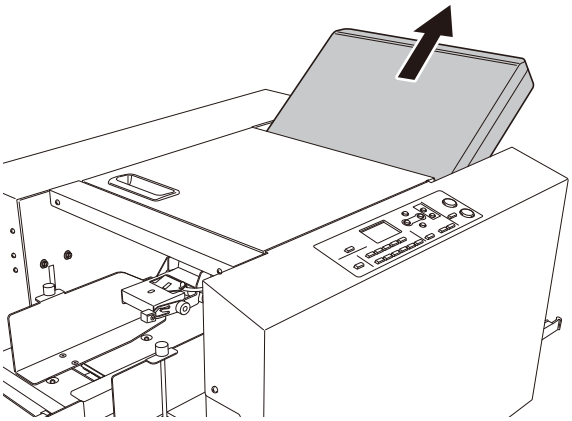

2 **Take out the folding plate 2.**

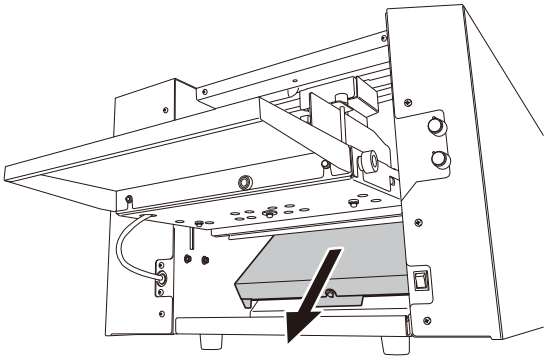

3 **Open the top cover.**

> **⚠ WARNING**
>
> **Open or close the top cover gently.**
> Hands or fingers may be caught in the cover section. Doing so may result in injury.

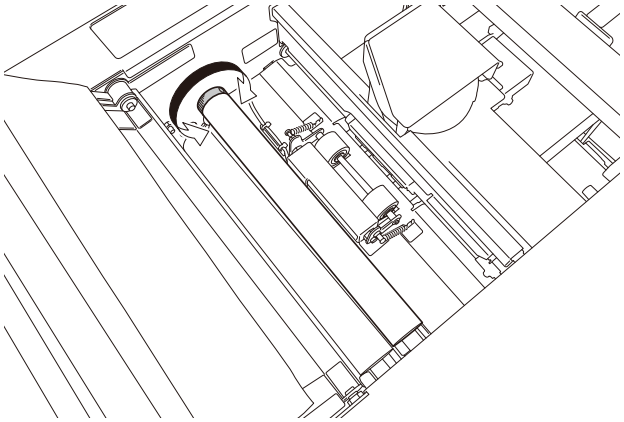

4 **Pull out the paper rotating the jam correction knob.**

5 **Close the top cover.**

6 **Insert the folding plate 1 and folding plate 2.**

Ref. Refer to "2-2. Folding plate" (p.5-5).

2-4. Ejecting section

U fgjc folding the c_ncel key, press the test key.

The paper is forcibly ejected.

Paper is ejected forcibly as long as the key is held down. Forcible ejection will stop by releasing the key.

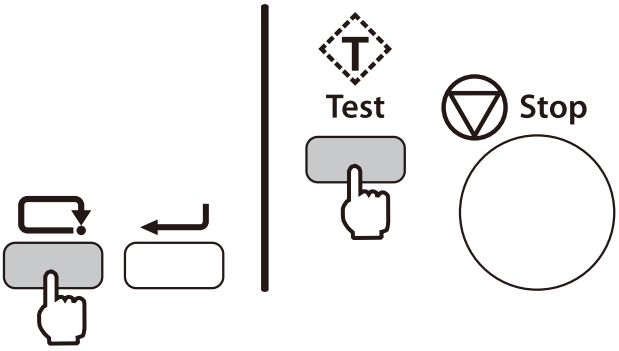

3. Troubleshooting

⚠WARNING

Do not use a flammable static electricity removal spray.
Doing so could cause build-up of gas inside the machine, which in turn could cause ignition, resulting in fire and explosion.

Condition	Cause	Solution
Power can not be turned on.	The power cord is not connected.	Connect the power cord.
The machine does not start operation when the start key is pressed.	Paper is not stacked.	Stack paper on the paper feed tray. **(p.2-2)**
	The paper switch is not responding.	Stack paper in correct position so that the paper switch responds.
	Paper has jammed.	Remove jammed paper. **(p.5-4)**
	The top cover is open.	Close the cover which is open.
	Non-standard paper is used in standard paper settings.	Change the settings to match non-standard paper. **(p.3-7)**
	The paper feed guide is off the paper size detection area.	Secure the paper feed guide correctly.
	Test folding is not performed even though the setting is changed to [ON] in [D-Feed Detect].	Test fold. **(p.3-21)**
	Other non-standard paper is used.	Input the paper size. **(p.3-7)**
The folding stopper of folding plate 1 or 2 does not operate.	The folding plates 1 and 2 are not set properly.	Set the folding plates 1 and 2 properly. **(p.5-5)**
Paper is not folded at the normal folding position.	The folding plates 1 and 2 are not set properly.	Set the folding plates 1 and 2 properly. **(p.5-5)**
	Static electricity is built up on paper.	• Use a commercially available static electricity removal spray. • Separate the paper well. **(p.1-13)** • Humidify with a humidifier as required.
Paper jam occurs.	Paper is not separated well.	Separate the paper well. **(p.1-13)**
	Paper is curled.	Correct the paper curl before use.
	The folding roller is stained.	Clean with a cloth moistened with alcohol. **(p.4-1)**
	The stacker roller is not positioned correctly.	Re-set the position of the stacker roller. **(p.3-23)**
	Static electricity is built up on paper.	• Use a commercially available static electricity removal spray. • Separate the paper well. **(p.1-13)** • Humidify with a humidifier as required.
	The clearance between the separator and suction belt is small.	Turn the separator adjustment knob to large scales. **(p.2-8)**
	The trail edge guide unit is pressed against the paper strongly.	Set the trail edge guide unit so that it will be in contact with the paper lightly. **(p.2-3)**
	The separating air adjustment knob is not positioned properly.	Turn the separating air adjustment knob to large scales. **(p.2-8)**
	Separating air volume is too low	Turn up [Sep. Air] volume by [5] scales at a time. **(p.2-6)**
	Thick paper is used.	Set the stack height sensor to first scale from the bottom. **(p.2-8)**

Condition	Cause	Solution
Paper feed interval is not stable.	Paper is curled.	Correct the paper curl before use. **(p.1-13)**
	Thick paper is used.	Set the stack height sensor to first scale from the bottom. **(p.2-8)**
The leading edge of paper does not misaligned too much, but double-feed occurs.	Paper is sticking and difficult to separate.	Check that the printing ink of the paper has dried and there is no static electricity, and then separate the paper well. **(p.1-13)**
	Paper out of specifications is used.	Do not use paper outside the specifications. **(p.1-12)**
	Paper is not stacked in alignment.	Stack the paper in alignment. **(p.1-14)**
	Loaded paper is more than 50 mm/ 1.96 inches in height.	Load paper so that it is less than 50 mm/1.96 inches in height. **(p.2-2)**
	The separating air adjustment knob is not positioned correctly.	Turn the separating air adjustment knob to small scales. **(p.2-8)**
	Separating air volume is too large.	Turn down [Sep. Air] volume by [5] scales at a time. **(p.2-6)**
	Pickup air volume is too large.	Turn down [Pickup Air] volume by [5] scales at a time. **(p.2-6)**
	The clearance between the separator and suction belt is too large.	Turn the separator adjustment knob to small scales. **(p.2-8)**
	The stack height sensor is not positioned correctly.	Set the stack height sensor to the standard position. **(p.2-8)**
	Paper is put on the paper detection sensor.	Stack paper again on the paper feed tray. **(p.1-14)**
Double-feed occurs with the leading edge of paper misaligned largely.	Paper out of specifications is used.	Do not use paper outside the specifications. **(p.1-12)**
	Paper is not stacked in alignment.	Stack the paper in alignment. **(p.1-14)**
	Loaded paper is more than 50 mm/ 1.96 inches in height.	Load paper so that it is less than 50 mm/ 1.96 inches in height. **(p.2-2)**
	The side guide unit is pressed against the paper strongly.	Set the side guide unit leaving some clearance between the side guide unit and paper. **(p.2-4)**
	The separating air adjustment knob is not positioned correctly.	Turn the separating air adjustment knob to large scales. **(p.2-8)**
	Separating air volume is too low	Turn up [Sep. Air] volume by [5] scales at a time. **(p.2-6)**
	Pickup air volume is too large.	Turn down [Pickup Air] volume by [5] scales at a time. **(p.2-6)**
	The clearance between the separator and suction belt is too large.	Turn the separator adjustment knob to small scales. **(p.2-8)**
	The stack height sensor is not positioned correctly.	Set the stack height sensor to the standard position. **(p.2-8)**

Condition	Cause	Solution
Miss-feed occurs.	The suction belt is stained.	Clean the belt with a cloth moistened with alcohol. **(p.4-3)**
	Paper is sticking and difficult to separate.	Check that the printing ink of the paper has dried and there is no static electricity, and then separate the paper well. **(p.1-13)**
	Paper out of specifications is used.	Do not use paper outside the specifications. **(p.1-12)**
	Paper is not stacked in alignment.	Stack the paper in alignment. **(p.1-14)**
	The paper feed guide is pressed against the paper strongly.	Set the paper feed guide so that it touches the paper lightly. **(p.2-3)**
	Suction timing is delayed because paper is too large and heavy.	Set [Feed Interval] to [Slow]. **(p.3-22)**
	The separating air adjustment knob is not positioned correctly.	Turn the separating air adjustment knob to small scales. **(p.2-8)**
	Separating air volume is too large.	Turn down [Sep. Air] volume by [5] scales at a time. **(p.2-6)**
	Pickup air volume is too low.	Turn up [Pickup Air] volume by [5] scales at a time. **(p.2-6)**
	The clearance between the separator and suction belt is small.	Turn the separator adjustment knob to larger scales. **(p.2-8)**
	The stack height sensor is not positioned correctly.	Set the stack height sensor to the standard position. **(p.2-8)**
	The side guide unit is pressed against the paper strongly.	Set the side guide unit leaving some clearance between the side guide unit and paper. **(p.2-4)**
Folding misalignment along the vertical length of the paper occurs.	Processing speed was changed midway through operation.	Adjust the folding stopper positions of folding plates 1 and 2. **(p.3-4)**
	Paper type (quality, thickness) was changed midway through operation.	
	The folding plate was removed while the stopper fixed mode was ON.	Press the clear key, holding down the cancel key.
Folding misalignment along the sides of the paper occurs.	Too many sheets of paper are stacked.	Reduce the paper amount.
	The paper feed guides are not set properly.	Set the paper feed guides properly. **(p.2-3)**
	The fixing screws of the paper feed guides got loose and the paper feed guide slipped out of position.	Tighten the fixing screws of the paper feed guides. **(p.2-3)**
	Paper is not cut properly.	Correct the folding misalignment along the sides of the paper using the skew correction knob. **(p.3-1)**
Continuous-feeding occurs with small paper.	Paper out of specifications is used.	Do not use paper outside the specifications. **(p.1-12)**
	The paper feed guides are not set properly.	Set the paper feed guides properly. **(p.2-3)**
	Paper is not properly aligned.	Stack the paper in alignment. **(p.1-14)**
	Thin flimsy paper is used.	Lower the processing speed. **(p.2-9)**
	Paper size with limitations in processing speed is used.	
	Paper feed interval timing is too fast.	Set [Feed Interval] to slow. **(p.3-22)**
	The pickup air volume is too large.	Set the [Pickup Air] volume according to the paper type. **(p.2-7)**
Single-folded thick paper jams at the folding rollers.	Paper out of specifications is used.	Do not use paper outside the specifications. **(p.1-12)**
	The processing speed is too slow.	Increase the processing speed. **(p.2-9)**
	Paper is not separated well.	Separate the paper well. **(p.1-13)**

Condition	Cause	Solution
When large paper is stacked on the paper feed tray, the tray does not rise even when the start key is pressed.	Too many sheets of paper are stacked.	Reduce the paper amount.
	Heavy paper is used.	
Mis-detection of double-feed occurs.	Test folding is not carried out after the paper is re-stacked.	Perform test folding whenever new sheets of paper are re-stacked. **(p.2-9)** Repeat test folding when a miss-feed or double-feed error occurs.
	Paper thickness in the double-feed detection setting is not appropriately set.	Check the paper thickness, change the setting of paper thickness to [Thick] and test fold again. **(p.3-20)**
	The printing state is variable within the range of double-feed detection.	Set the double-feed detection to OFF. **(p.3-20)** (At this time, double-feed is not detected.)
Mis-detection of mis-feed occurs.	Paper is fed askew.	Align paper appropriately and stack the paper at a proper position. **(p.1-14)**
	Double-feed detection is set to [ON], the paper thickness is not appropriate.	Check the paper thickness, change the setting of paper thickness to [Thin] and test fold again. **(p.3-20)**
Paper jam occurs in cross fold.	The trail edge guide unit is pressed against the paper strongly.	Set the trail edge guide unit leaving some clearance between the trail edge guide unit and paper. **(p.3-14)**
	The set values of separating air and pickup air are not proper.	Set the values of each air applicable to cross fold. **(p.3-14)**
	The clearance between the separator and suction belt is small.	Turn the separator adjustment knob to large scales. **(p.3-14)**
	The stack height sensor is not positioned correctly.	Set the stack height sensor to the standard position. **(p.3-15)**
	The processing speed is too fast.	Set the processing speed to [4] or less. **(p.3-15)**
	Paper feed interval timing is too fast.	Change [Feed Interval] to [Normal]. When handling thick paper, change the setting to [Slow]. **(p.3-15)**
Paper creases in cross fold.	Separating air volume is too large.	Turn down [Sep. Air] volume by [5] scales at a time. **(p.3-14)**

Chapter 6 Appendix

Specifications

Depending on the system configuration, the specification may vary. Ask your dealer for details.

Model		DF-1200
Type		Desktop-type
Paper feed method		Fan motor belt suction method
Paper size	Length	182 to 457.2 mm/7.17 to 18 inches
	Width	120 to 311 mm/4.73 to 12.24 inches
	Regular size	A3, A4, A5, B4, B5, B6/LGR, LGL, LTR, INV, STMT
Paper quality		Fine quality paper, Recycled paper, Drawing paper : 52.3 to 157 g/m^2/14 to 40 lb Art paper, Coated paper : 73.3 to 157 g/m^2/19 to 40 lb * The processing speed is limited for coated paper of 104.7 g/m^2/28 lb or less and fine quality paper of 81.4 g/m^2/22 lb or less.
Folding mode		Single fold, Double fold, Irregular accordion fold, Letter fold, Accordion fold, Brochure fold, Specific cross fold, Custom fold. * Available custom fold modes are limited depending on paper type and size. * For cross fold, the paper quality, paper size, ream weight and processing speed (3 or less) are limited.
Number of custom folding registration memories		20
Stacking amount for feeding paper	Sheet paper	50 mm/1.96 inches or less Fine quality paper: 64 g/m^2/17 lb, 625 sheets 81.4 g/m^2/21.6 lb, 490 sheets Art or coated paper 104.7 g/m^2/21.82 lb, 560 sheets
	Single folded paper	25 mm/0.98 inch or less
Processing speed (Max.)		260 sheets/minute (A4 fine quality paper 81.4 g/m^2/21.6 lb, single fold, processing speed 6, feed interval fast)
Additional functions		• Test folding • Standard folding registration • Custom folding registration • Entire paper length input mode • Folding stopper fixed • Refold function • Ejection interval function • Thin paper mode • Force eject function • Force eject inside folding plate • LCD display energy-saving • Power still ON alert • Paper feed interval adjusting function • Idling function • Separating air output adjustment mode • Cross fold mode • Paper ejection volume setting function • Paper feed tray descent distance setting function
Error detection functions		• No paper detection • Paper jamming detection • Miss-feed detection • Double feed detection (Limited paper quality, size, setting) • Paper size error
Other detection functions		• In-machine jamming • Ejection section jamming • Folding plate 1 set error • Top cover open • Folding plate 2 set error • Paper feed tray stuck prevention detection • Paper feed pick up limit breakdown prevention detection
Airborne noise		Equivalent continuous A-weighted sound pressure level: 74.3 dB Sound pressure level: 94.3 dB Put this machine on the table and measure at the place where it is 1 m/39.37 inches from the control panel and 1.5 m/59.05 inches from the floor.
Power supply		AC100 to 240 V 50/60 Hz
Current consumption		175 W (SIDE AIR KIT disconnected: 130 W) 1.8 to 0.7 A (SIDE AIR KIT disconnected: 1.3 to 0.6 A)
Dimensions		When in use: 1193(W) x 587(D) x 541(H) mm/46.97(W) x 23.11(D) x 21.30(H) inches When in stored: 806(W) x 587(D) x 541(H) mm/31.73(W) x 23.11(D) x 21.30(H) inches
Mass (Weight)		65.5 kg/144.4 lb (Including accessories)
Option		SIDE AIR KIT